RG M63 seal

RG M63 型密封件
RG M63 Kabelverschraubung
Sello RG M63
Presse-étoupe M63 Roxtec

GB The Roxtec RG M63 entry seal is a cable gland type of seal with Multidiameter modules at the center.

- Attachment by counter ring nut
- For one to nine cables
- Allows use of preterminated cables

CN Roxtec RG M63 入口密封组件为随套件提供的电缆压盖型组件，其中心为多径模块。

- 由埋头螺母安装
- 可密封 1 到 9 根电缆
- 可用于密封预先端接电缆

DE Die Roxtec RG M63 Kabelverschraubung ist ein Kit mit zentraler Multi-Durchmesser-Technik.

- Einbau mit Kontermutter
- Für ein bis neun Kabel
- Verwendung mit vorkonfektionierten Kabeln möglich

ES El sello de entrada RG M63 de Roxtec es un prensaestopas con módulos multidiámetro en el centro.

- Adhesión por contratuerca.
- Para 1-9 cables
- Permite usar cables predeterminados

FR Le presse-étoupe RG M63 associe la technique de presse-étoupe à des modules multidiamètres en son centre.

- Fixation par contre-écrou
- Pour de un à neuf câbles
- Permet l'utilisation de câbles prédéfinis

RG M63 seals

Gland 套件 ❱ RG M63 Kabelverschraubungen ❱ Sello RG M63 ❱ Presses-étoupe RG M63

RG M63/1
RG00063010046

RG M63/4
RG00063040046

RG M63/9
RG00063090046

Accessories

page 159

IP: 67 - **UL/NEMA**: 4, 4X,12,13

CN	套件	电缆/管道的数量	适配电缆/管道的直径范围和数量			外部尺寸 ØxD（毫米）	ØxD（英寸）	重量（千克）	（磅）	货号
DE	Kit	Anzahl der Kabel/Rohre	Multi-Durchmesserbereich und Anzahl der Kabel/Rohre			Außenmaße ØxD (mm)	ØxD (in.)	Gewicht (kg)	(lb)	Art.-Nr.
ES	Kit	Número de cables/tuberías	Intervalo multidiámetro y número de cables/tuberías			Dim. externas ØxD (mm)	ØxD (pulgadas)	Peso (kg)	(libra)	Nº art.
FR	Kit	Nombre de câbles/ tuyauteries	Plage des diamètres et nombre de traversants possibles			Dim. extérieures ØxD (mm)	ØxD (pouces)	Poids (kg)	(lb)	N° d'article
GB	**Kit**	**Number of cables/pipes**	**Multidiameter range and number of cables/pipes**			**External dimensions ØxD (mm)**	**ØxD (in)**	**Weight (kg)**	**(lb)**	**Art No.**
			0+3.5-10.5 mm 0+0.138-0.413 in (GM 13,3w40)	**0+3.5-16.5 mm 0+0.138-0.650 in (GM 20w40)**	**0+9.5-32.5 mm 0+0.374-1.280 in (GM 40 10-32)**					
RG M63/1		1			1 cable/pipe	74 x 51	2.913 x 2.008	0.5	1.213	**RG00063010046**
RG M63/4		4		4 cables/pipes		74 x 51	2.913 x 2.008	0.5	1.213	**RG00063040046**
RG M63/9		9	9 cables/pipes			74 x 51	2.913 x 2.008	0.5	1.213	**RG00063090046**

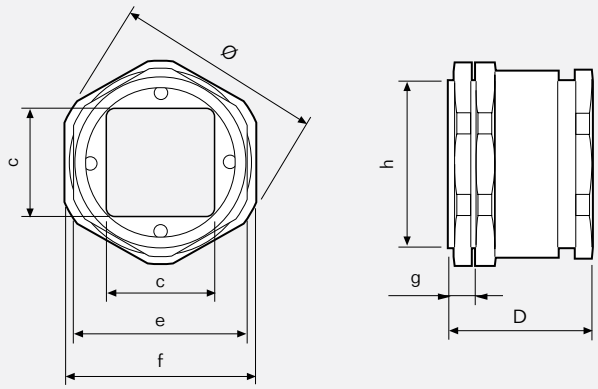

Pos	(mm)	(in)
c	40	1.575
e	SW 64	SW 2.520
f	SW 68	SW 2.677
g	10	0.394
h	M63x1.5	M63x1.5
D	51	2.008

Note: All dimensions are nominal values
注意：所有的尺寸都是参考值
Achtung: Alle angegebenen Maße sind Nominalwerte
Nota: Todas las dimensiones son valores nominales
N.B. : toutes les dimensions sont nominales

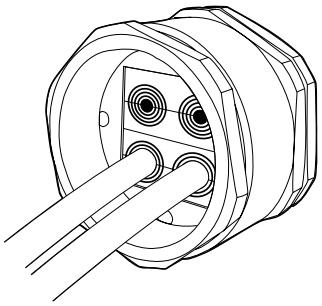

Roxtec

Assembly Instruction
Roxtec RG M63

RG M63/1

1 pcs	Housing
1 pcs	Pressure screw
1 pcs	Lock nut
2 pcs	Washer
1 pcs	Compression rubber
1 pcs	Module 40 10-32
1 pcs	Slip washer
1 pcs	O-ring
1 pcs	Lubricant

RG M63/4

1 pcs	Housing
1 pcs	Pressure screw
1 pcs	Lock nut
2 pcs	Washer
1 pcs	Compression rubber
2 pcs	Module 20w40
1 pcs	Slip washer
1 pcs	O-ring
1 pcs	Lubricant

RG M63/9

1 pcs	Housing
1 pcs	Pressure screw
1 pcs	Lock nut
2 pcs	Washer
1 pcs	Compression rubber
3 pcs	Module 13.3w40
1 pcs	Slip washer
1 pcs	O-ring
1 pcs	Lubricant

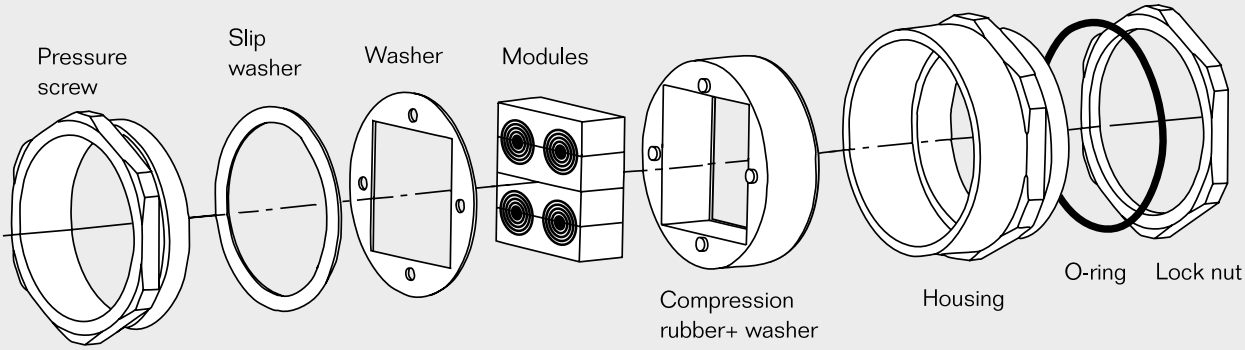

Roxtec RG M63 installation

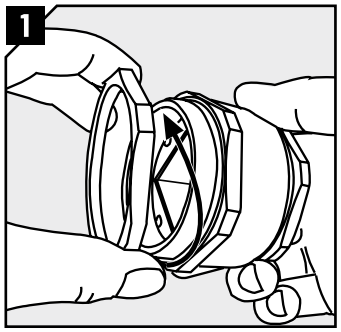

Separate the lock nut from the gland housing.

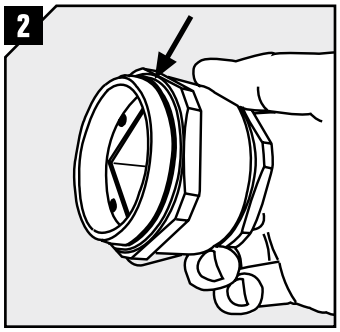

Check that the O-ring is in the right place.

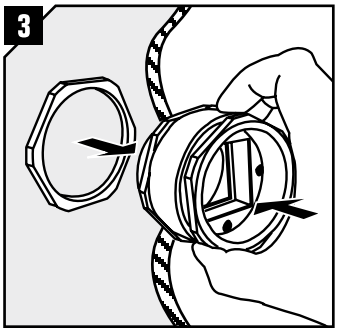

Insert the gland in the hole. Fasten with the lock nut. Hole dimensions 63,5–64 mm (2.499-2.519”).
Max wall thickness 4 mm (0.157”)

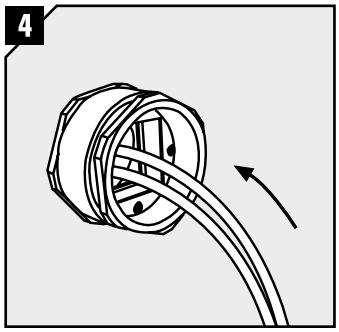

Pull all the cables through.

Page over

ASS20050021 01 ver_1.1/GB/0650/olaher

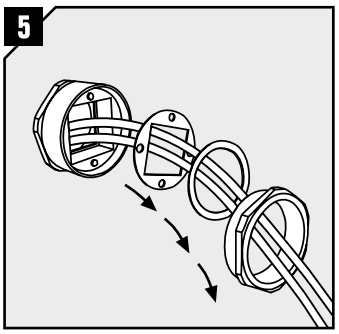

Temporarily remove the pressure screw, slip washer and the washer.

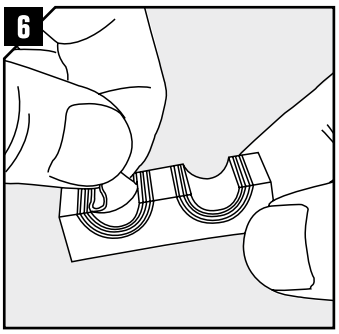

Adapt modules which are to hold cables by peeling layers until you reach the gap seen in pic. 7.

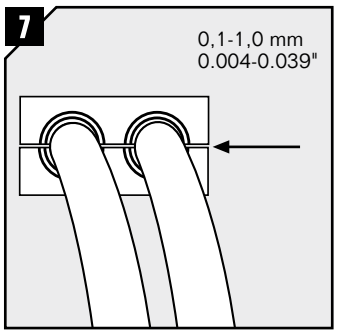

Achieve a 0.1-1.0 mm gap between the two halves when held against the cable.

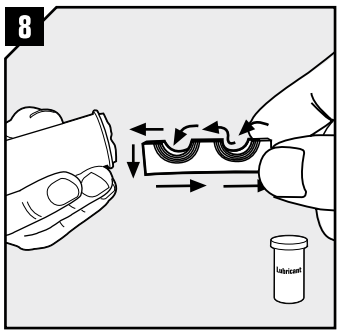

Lubricate all modules for the frame thoroughly with Roxtec Luibricant, both the inside and the outside surfaces.

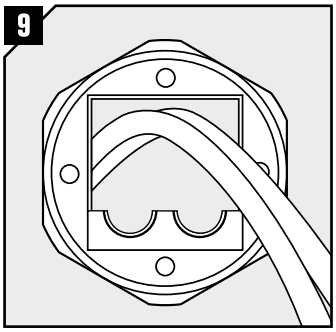

Start by placing a module half at the bottom.

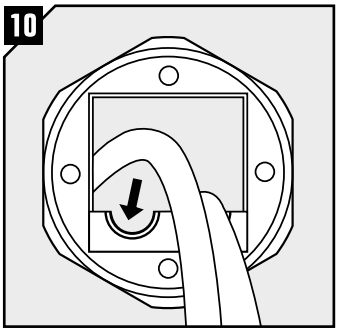

Place the cables in the adapted modules.

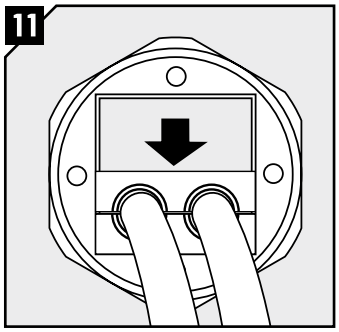

Add the second module half on top.

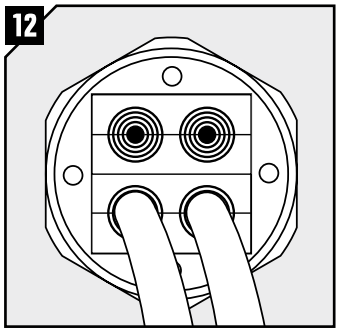

Repeat step 10-11 until the packing space is filled.

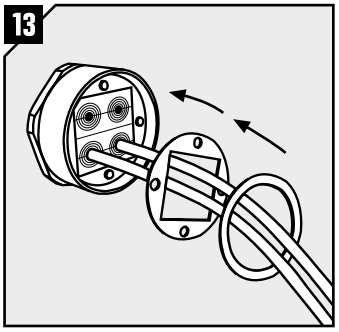

Put the washer and slip washer back in place.

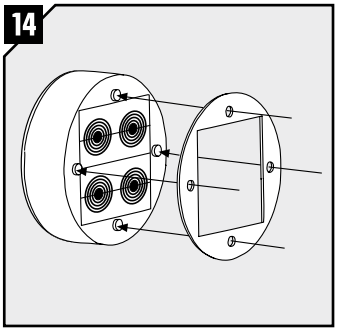

Adjust the washer to match the compression rubber.

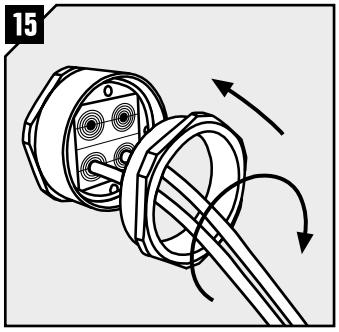

Reinstall the pressure screw. Tighten it hard to compress the gland.

Note

- For optimum relability, wait 24 hours or longer after installation before exposing the cables/ pipes to strain or pressure.
- To be used with: CM components.
- Cables shall go straight through the frame.

Disassembly instruction

Reverse order

DISCLAIMER

"THE ROXTEC CABLE ENTRY SEALING SYSTEM ("THE ROXTEC SYSTEM") IS A MODULAR BASED SYSTEM OF SEALING PRODUCTS CONSISTING OF DIFFERENT COMPONENTS. EACH AND EVERY ONE OF THE COMPONENTS ARE NECESSARY FOR THE BEST PERFORMANCE OF THE ROXTEC SYSTEM. THE ROXTEC SYSTEM HAS BEEN CERTIFIED TO RESIST A NUMBER OF DIFFERENT HAZARDS. ANY SUCH CERTIFICATION, AND THE ABILITY OF THE ROXTEC SYSTEM TO RESIST SUCH HAZARDS, IS DEPENDENT ON ALL COMPONENTS THAT ARE INSTALLED AS A PART OF THE ROXTEC SYSTEM. THUS, THE CERTIFICATION IS NOT VALID AND DOES NOT APPLY UNLESS ALL COMPONENTS INSTALLED AS PART OF THE ROXTEC SYSTEM ARE MANUFACTURED BY OR UNDER LICENSE FROM ROXTEC ("AUTHORIZED MANUFACTURER"). ROXTEC GIVES NO PERFORMANCE GUARANTEE WITH RESPECT TO THE ROXTEC SYSTEM, UNLESS (I) ALL COMPONENTS INSTALLED AS PART OF THE ROXTEC SYSTEM IS MANUFACTURED BY AN AUTHORIZED MANUFACTURER AND (II) THE PURCHASER IS IN COMPLIANCE WITH (A), AND (B), BELOW.

(A) DURING STORAGE, THE ROXTEC SYSTEM OR PART THEREOF, SHALL BE KEPT INDOORS IN ITS ORIGINAL PACKAGING AT A TEMPERATURE NOT EXCEEDING +70°C/158°F AND NOT BELOW -40°C/-40°F.

(B) INSTALLATION SHALL BE CARRIED OUT IN ACCORDANCE WITH ROXTEC ASSEMBLY INSTRUCTION IN EFFECT FROM TIME TO TIME.

THE PRODUCT INFORMATION PROVIDED BY ROXTEC DOES NOT RELEASE THE PURCHASER OF THE ROXTEC SYSTEM, OR PART THEREOF, FROM THE OBLIGATION TO INDEPENDENTLY DETERMINE THE SUITABILITY OF THE PRODUCTS FOR THE INTENDED PROCESS, INSTALLATION AND/OR USE.

ROXTEC GIVES NO GUARANTEE FOR THE ROXTEC SYSTEM OR ANY PART THEREOF AND ASSUMES NO LIABILITY FOR ANY LOSS OR DAMAGE WHATSOEVER, WHETHER DIRECT, INDIRECT, CONSEQUENTIAL, LOSS OF PROFIT OR OTHERWISE, OCCURRED OR CAUSED BY THE ROXTEC SYSTEMS OR INSTALLATIONS CONTAINING COMPONENTS NOT MANUFACTURED BY AN AUTHORIZED MANUFACTURER.

ROXTEC EXPRESSLY EXCLUDES ANY IMPLIED WARRANTIES OF MERCHANTABILITY AND FITNESS FOR A PARTICULAR PURPOSE AND ALL OTHER EXPRESS OR IMPLIED REPRESENTATIONS AND WARRANTIES PROVIDED BY STATUTE OR COMMON LAW. USER DETERMINES SUITABILITY OF THE ROXTEC SYSTEM FOR INTENDED USE AND ASSUMES ALL RISK AND LIABILITY IN CONNECTION THEREWITH. IN NO EVENT SHALL ROXTEC BE LIABLE FOR CONSEQUENTIAL, PUNITIVE, SPECIAL, EXEMPLARY OR INCIDENTAL DAMAGES."

Roxtec

Roxtec International AB
Box 540, 371 23 Karlskrona, SWEDEN
PHONE +46.455.36 67 00, FAX +46.455.820 12
EMAIL info@se.roxtec.com, www.roxtec.com