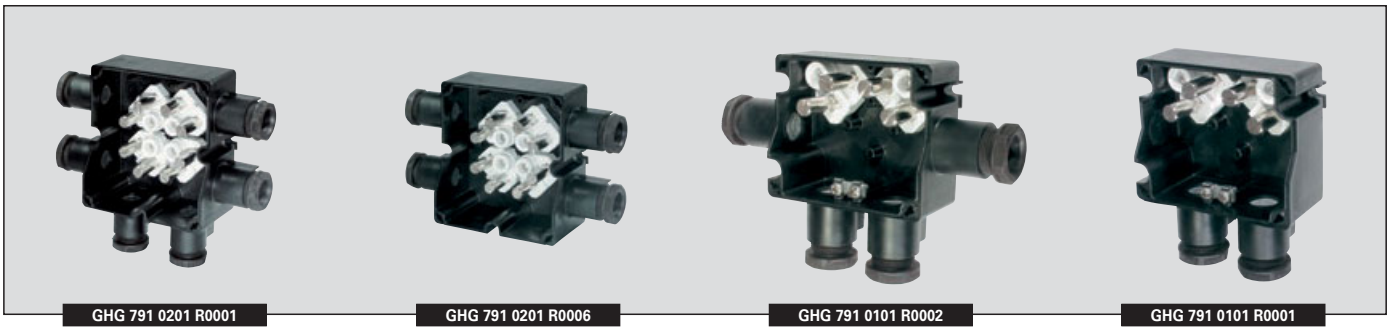

Technical data

GHG 791 01 up to 6 terminals / GHG 791 02 up to 8 terminals	
Marking accd. to 94/9/EC	Ex II 2 G Ex dem ia II, IIC T6 / Ex II 2 D Ex tD A21 IP66 T80 °C
EC-Type Examination Certificate	PTB 00 ATEX 3108
IECEx Certificate of Conformity	IECEx BKI 07.0034
Marking accd. to IECEx	Ex e II T6 / Ex ia IIC T6 Ex tD A21 IP66 T58 °C
Permissible ambient temperature	–20 °C to +40 °C / –55 °C to +40 °C (option)
Rated voltage	690 V / 550 V[1)]
Rated current	depends on terminal cross section
Terminal cross section	max. 3 x 4 mm^2 or 1 x 10 mm^2 with pin cable lug + 1 x 2.5 mm^2 fine wire max. 3 x 6 mm^2 or 4 x 4 mm^2 solid-wire
Protection class	I
Degree of protection accd. to EN 60529	IP66
Enclosure material	Polyamide

GHG 791 01 up to 6 terminals	
Cable entry/enclosure drilling	max. 4 x M25 for cable Ø 10 - 17 mm max. 4 x M20 metal thread
Connecting terminals	4 x + 1 PE
Dimensions (L x W x H)	81.5 x 100 x 61 mm
Weight	approx. 0.3 kg

GHG 791 02 up to 8 terminals	
Cable entry/enclosure drilling	max. 6 x M25 for cable Ø 10 - 17 mm max. 6 x M32 for cable Ø 12 - 21 mm max. 6 x M20 metal thread
Connecting terminals	6 x + 2 PE
Dimensions (L x W x H)	117.5 x 113.5 x 73.5 mm
Weight	approx. 0.5 kg

[1)] for cage clamp terminals

GHG 791 0101 R0001

GHG 791 0101 R0019

GHG 791 0101 R0068

GHG 791 0201 R0006

Ordering details

Content	Cable gland	No. of terminals	Order No.
GHG 791 01 up to 6 terminals			
	2 x M25 for cable Ø 10-17 mm	4 x Ex-e, 1 x PE	**GHG 791 0101 R0001**
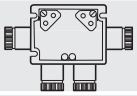	4 x M25 for cable Ø 10-17 mm incl. 2 x blanking plug M25	4 x Ex-e, 1 x PE	**GHG 791 0101 R0002**
	4 x M20 metal thread incl. 2 x threaded plug M20	4 x Ex-e, 1 x PE	**GHG 791 0101 R0019**
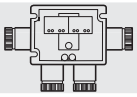	4 x M25 for cable Ø 10-17 mm incl. 2 x blanking plug M25	4 x 4 Ex-e[1], 2 x PE	**GHG 791 0101 R0069**
	4 x M20 metal thread incl. 2 x threaded plug M20	4 x 4 Ex-e[1], 2 x PE	**GHG 791 0101 R0068**
GHG 791 02 up to 8 terminals			
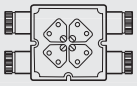	4 x M25 for cable Ø 10-17 mm incl. 2 x blanking plug M25	6 x Ex-e, 2 x PE	**GHG 791 0201 R0006**
	4 x M32 for cable Ø 12-21 mm incl. 2 x blanking plug M32	6 x Ex-e, 2 x PE	**GHG 791 0201 R0007**
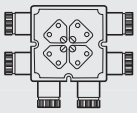	6 x M25 for cable Ø 10-17 mm incl. 4 x blanking plug M25	6 x Ex-e, 2 x PE	**GHG 791 0201 R0001**
	6 x M32 for cable Ø 12-21 mm incl. 4 x blanking plug M32	6 x Ex-e, 2 x PE	**GHG 791 0201 R0002**
	6 x M20 metal thread incl. 4 x threaded plug M20	8 x Ex-e, 1 x PE	**GHG 791 0201 R0003**

Other applications available on request.

[1] Cage clamp terminal

Accessories

Mounting plate for junction box 791 01

Type	Application	Fixing method	Order No.
Size 1	Wall mounting	snap on	**GHG 610 1953 R0101**
Size 1	for trellis mounting	snap on	**GHG 610 1953 R0103**
Size 1	pipe clamp	snap on	**GHG 610 1953 R0102**
Protective canopy size 2	for mounting plate size 1		**GHG 610 1955 R0101**

Mounting plate for junction box 791 02

Type	Application	Fixing method	Order No.
Size 2	Wall mounting	snap on	**GHG 610 1953 R0104**
Size 2	for trellis mounting	snap on	**GHG 610 1953 R0106**
Size 2	pipe clamp	snap on	**GHG 610 1953 R0105**
Protective canopy size 2	for mounting plate size 2		**GHG 610 1955 R0102**

Details for accessories see page 2.2.80 up to 2.2.84.

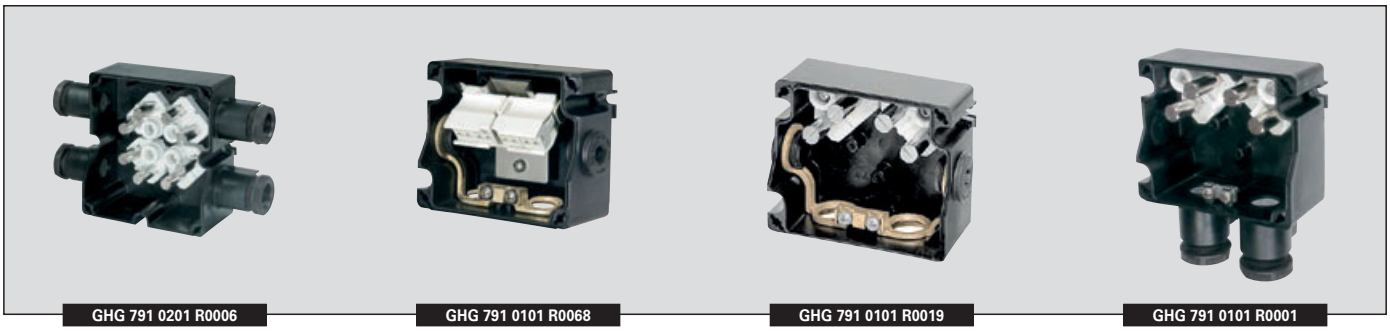

GHG 791 0201 R0006 | GHG 791 0101 R0068 | GHG 791 0101 R0019 | GHG 791 0101 R0001

Dimension drawing

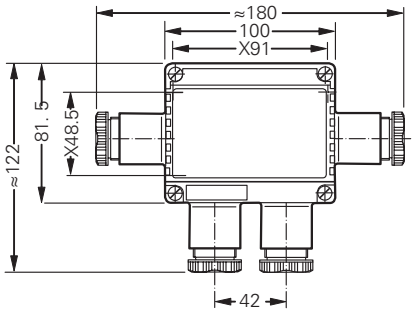

Type 791 01

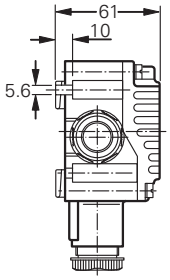

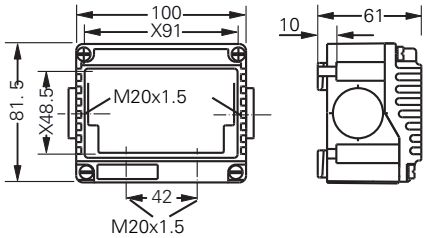

Type 791 01 for metal cable glands

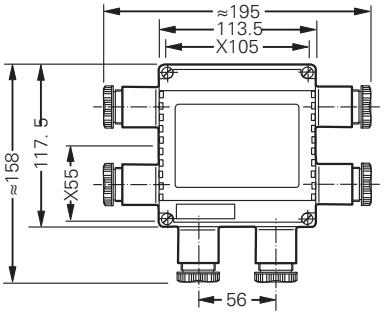

Type 791 02

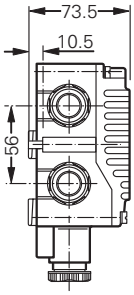

X = fixing dimensions

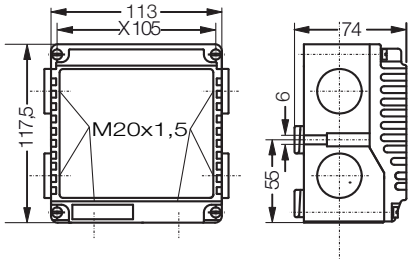

Type 791 02 for metal cable glands

Dimensions in mm

Physikalisch-Technische Bundesanstalt

Braunschweig und Berlin

(1) # EC-TYPE-EXAMINATION CERTIFICATE

(Translation)

(2) Equipment and Protective Systems Intended for Use in Potentially Explosive Atmospheres - **Directive 94/9/EC**

(3) EC-type-examination Certificate Number:

PTB 00 ATEX 3108

(4) Equipment: Junction boxes and terminal boxes of types GHG 79101 a. 79102

(5) Manufacturer: CEAG Sicherheitstechnik GmbH

(6) Address: Neuer Weg Nord 49, D-69412 Eberbach

(7) This equipment and any acceptable variation thereto are specified in the schedule to this certificate and the documents therein referred to.

(8) The Physikalisch-Technische Bundesanstalt, notified body No. 0102 in accordance with Article 9 of the Council Directive 94/9/EC of 23 March 1994, certifies that this equipment has been found to comply with the Essential Health and Safety Requirements relating to the design and construction of equipment and protective systems intended for use in potentially explosive atmospheres, given in Annex II to the Directive.

The examination and test results are recorded in the confidential report PTB Ex 00-30059.

(9) Compliance with the Essential Health and Safety Requirements has been assured by compliance with:

EN 50 014:1997 EN 50 019:1994 EN 50 020:1994

(10) If the sign "X" is placed after the certificate number, it indicates that the equipment is subject to special conditions for safe use specified in the schedule to this certificate.

(11) This EC-type-examination Certificate relates only to the design and construction of the specified equipment in accordance with Directive 94/9/EC. Further requirements of this Directive apply to the manufacture and supply of this equipment.

(12) The marking of the equipment shall include the following:

Ex II 2 G EEx e II T6 bzw. EEx ia IIC T6

Zertifizierungsstelle Explosionsschutz
By order:

Braunschweig, July 20, 2000

Dr.-Ing. U. Engel
Regierungsdirektor

PHYSIKALISCH-TECHNISCHE BUNDESANSTALT

sheet 1/2

EC-type-examination Certificates without signature and official stamp shall not be valid. The certificates may be circulated only without alteration. Extracts or alterations are subject to approval by the Physikalisch-Technische Bundesanstalt.
In case of dispute, the German text shall prevail.

(13) # SCHEDULE

(14) ## EC-TYPE-EXAMINATION CERTIFICATE PTB 00 ATEX 3108

(15) Description of equipment

Junction boxes and terminal boxes made of polyamide of types GHG 791 01 and 791 02, intended for permanent installation, with built-in modular or mantle terminals for non-intrinsically safe and intrinsically safe (certified separatly) circuits.

Marking for the type of protection

Fitting with terminals

- for non-intrinsically safe circuits only	EEx e II T6
- for intrinsically safe circuits only	EEx ia IIC T6

Technical data

Rated voltage:	maximally 750 V (depending on the working voltage of the terminals used)

For terminal boxes have been specified rated current, number of conductors and conductor cross section in the supplementary sheets.

Junction boxes GHG 791 01 and GHG 791 02:

Rated cross section, max.:	2.5 mm²	4.0 mm²	6.0 mm²
Rated current, max.:	22 A	30 A	39 A

Ambient temperature range, normal if EPDM gaskets are used:	$-20\ °C \leq T_{amb} \leq +40\ °C$
Extended ambient temperature range if silicon gaskets are used:	$-50\ °C \leq T_{amb} \leq +40\ °C$
Protection against contact, foreign bodies and water:	at least IP 54 acc. to EN 60 529:1991

Note

The degree of protection - at least IP 54 - will be reached only by adequate use of the separately tested gaskets, cable and conduit entries and sealing plugs.

Suitability for low ambient temperatures is indicated by separate marking. Only, such gaskets and attachments which are suitable for these temperatures and for which a separate certificate has been issued. Further notes of the manufacturer are to be taken into account.

(16) Test report PTB Ex 00-30059

(17) Special conditions for safe use — not applicable

(18) Essential health and safety requirements — met by compliance with standards

Zertifizierungsstelle Explosionsschutz
By order:

Braunschweig, July 20, 2000

Dr.-Ing. U. Eng
Regierungsdirektor

PHYSIKALISCH-TECHNISCHE BUNDESANSTALT

EC-type-examination Certificates without signature and official stamp shall not be valid. The certificates may be circulated only without alteration. Extracts or alterations are subject to approval by the Physikalisch-Technische Bundesanstalt.
In case of dispute, the German text shall prevail.

Physikalisch-Technische Bundesanstalt • Bundesallee 100 • D-38116 Braunschweig

Physikalisch-Technische Bundesanstalt

Braunschweig und Berlin

1st SUPPLEMENT

according to Directive 94/9/EC Annex III.6

to EC-TYPE-EXAMINATION CERTIFICATE PTB 00 ATEX 3108

(Translation)

Equipment: Branching or terminal boxes, type GHG 791 01 and 791 02

Marking: Ex **II 2 G EEx e II T6 or EEx ia IIC T6**

Manufacturer: CEAG Sicherheitstechnik GmbH

Address: Neuer Weg Nord 49
69412 Eberbach, Germany

Description of supplements and modifications

The branching or terminal boxes, of type GHG 791 01 and 791 02 may now also be used in areas that have to be expected to be occasionally exposed to potentially explosive atmospheres with dust/air mixtures.

The marking, therefore, changes to

Ex **II 2 G/D EEx e II T6 or EEx ia IIC T6 IP66 T 58 °C**

Test report: PTB Ex 01-11176

Zertifizierungsstelle Explosionsschutz
By order:

Braunschweig, July 26, 2001

Dipl.-Phys. U. Völkel

PHYSIKALISCH-TECHNISCHE BUNDESANSTALT 24

EC-type-examination Certificates without signature and official stamp shall not be valid. The certificates may be circulated only without alteration. Extracts or alterations are subject to approval by the Physikalisch-Technische Bundesanstalt.
In case of dispute, the German text shall prevail.

Physikalisch-Technische Bundesanstalt • Bundesallee 100 • D-38116 Braunschweig

Physikalisch-Technische Bundesanstalt

Braunschweig und Berlin

2nd SUPPLEMENT

according to Directive 94/9/EC Annex III.6

to EC-TYPE-EXAMINATION CERTIFICATE PTB 00 ATEX 3108

(Translation)

Equipment: Junction boxes and terminal boxes, types GHG 791 01 and 791 02

Marking: Ex **II 2 G/D EEx e II T6 or EEx ia IIC T6 IP66 T 58 °C**

Manufacturer: CEAG Sicherheitstechnik GmbH

Address: Neuer Weg Nord 49
69412 Eberbach, Germany

Description of supplements and modifications

The junction boxes and terminal boxes, types GHG 791 01 and GHG 791 02, are extended to additionally include type GHG 79. .... R.... . This type has an enclosure made from stainless steel or aluminium and can be fitted with terminals for intrinsically safe or non-intrinsically safe circuits.
It is designed for the field of application (no dust):

Ex **II 2 G EEx e II T6 or EEx ia IIC T6**

The technical data are not affected by the modifications.

Ambient temperature range ..... -55 °C to +55 °C

Notes for manufacture and operation

For the maximum number of conductors for each enclosure size, which is subject to the cross section and the permissible continuous current, reference is made to the attached data sheets.

Test report: PTB Ex 01-11317

Zertifizierungsstelle Explosionsschutz
By order:

Braunschweig, February 11, 2002

Dr.-Ing. U. Klausmeyer
Regierungsdirektor

PHYSIKALISCH-TECHNISCHE BUNDESANSTALT 24

Sheet 1/1

EC-type-examination Certificates without signature and official stamp shall not be valid. The certificates may be circulated only without alteration. Extracts or alterations are subject to approval by the Physikalisch-Technische Bundesanstalt.
In case of dispute, the German text shall prevail.

Physikalisch-Technische Bundesanstalt

Braunschweig und Berlin

3rd SUPPLEMENT

according to Directive 94/9/EC Annex III.6

to EC-TYPE-EXAMINATION CERTIFICATE PTB 00 ATEX 3108

(Translation)

Equipment: Branching or terminal boxes, types GHG 791 01 and 791 02

Marking: Ex **II 2 G/D EEx e II T6 and EEx ia IIC T6 IP66 T 58 °C**

Manufacturer: CEAG Sicherheitstechnik GmbH

Address: Neuer Weg Nord 49
69412 Eberbach, Germany

Description of supplements and modifications

The branching or terminal boxes of types GHG 791 01 and 791 02 may optionally be provided with cable entry, type GHG 960 92.. P...., size M25, with long screw thread.

Notes for installation and operation

The cable entry shall be glued in place by means of adhesive DELO-PUR 9693

Test report: PTB Ex 02-12279

Zertifizierungsstelle Explosionsschutz
By order:

Braunschweig, September 13, 2002

Dr.-Ing. U. Klausmeyer
Regierungsdirektor

PHYSIKALISCH-TECHNISCHE BUNDESANSTALT 24

EC-type-examination Certificates without signature and official stamp shall not be valid. The certificates may be circulated only without alteration. Extracts or alterations are subject to approval by the Physikalisch-Technische Bundesanstalt.
In case of dispute, the German text shall prevail.

Physikalisch-Technische Bundesanstalt • Bundesallee 100 • D-38116 Braunschweig

Physikalisch-Technische Bundesanstalt

Braunschweig und Berlin

4th SUPPLEMENT

according to Directive 94/9/EC Annex III.6

to EC-TYPE-EXAMINATION CERTIFICATE PTB 00 ATEX 3108

(Translation)

Equipment: Branching / terminal boxes, types GHG 791 01 and 791 02

Marking: Ex **II 2 G/D EEx e II T6 or EEx ia IIC T6 IP66 T 58 °C**

Manufacturer: Cooper Crouse-Hinds GmbH (previously CEAG Sicherheitstechnik GmbH)

Address: Neuer Weg Nord 49, 69412 Eberbach, Germany

Description of supplements and modifications

The branching / junction boxes, types GHG 791 01 and 791 02, may optionally be provided with the cable entry, type GHG 960 92.. P...., size M32, with long screw thread.

Notes for manufacturing and operation

The cable entry shall be glued in place, using DELO-PUR 9694 adhesive.

Test report: PTB Ex 04-14087

Zertifizierungsstelle Explosionsschutz
By order:

Braunschweig, April 28, 2004

Dipl.-Phys. U. Völker

EC-type-examination Certificates without signature and official stamp shall not be valid. The certificates may be circulated only without alteration. Extracts or alterations are subject to approval by the Physikalisch-Technische Bundesanstalt.
In case of dispute, the German text shall prevail.

Physikalisch-Technische Bundesanstalt • Bundesallee 100 • D-38116 Braunschweig

Physikalisch-Technische Bundesanstalt

Braunschweig und Berlin

5th SUPPLEMENT

according to Directive 94/9/EC Annex III.6

to EC-TYPE-EXAMINATION CERTIFICATE PTB 00 ATEX 3108

(Translation)

Equipment: Branching or terminal boxes, types GHG 791 01 and 791 02

Marking: Ex **II 2 G/D EEx e II T6 or EEx ia IIC T6 IP66 T 58 °C**

Manufacturer: Cooper Crouse-Hinds GmbH

Address: Neuer Weg Nord 49, 69412 Eberbach, Germany

Description of supplements and modifications

The branching or terminal boxes of types GHG 791 01 and 791 02 may be provided with an outside earthing terminal.

The companion sheet version for determination of the maximum number of conductors for each enclosure size as a function cross section and the permissible continuous current may optionally be that of 13 September 2004.

Test report: PTB Ex 04-14134

Zertifizierungsstelle Explosionsschutz
By order:

Braunschweig, November 2, 2004

Dipl.-Phys. U. Völkel

EC-type-examination Certificates without signature and official stamp shall not be valid. The certificates may be circulated only without alteration. Extracts or alterations are subject to approval by the Physikalisch-Technische Bundesanstalt.
In case of dispute, the German text shall prevail.

Physikalisch-Technische Bundesanstalt • Bundesallee 100 • D-38116 Braunschweig

Physikalisch-Technische Bundesanstalt

Braunschweig und Berlin

6th SUPPLEMENT

according to Directive 94/9/EC Annex III.6

to EC-TYPE-EXAMINATION CERTIFICATE PTB 00 ATEX 3108

(Translation)

Equipment: Branching or terminal boxes, type GHG 79. .... R....

Marking: Ex **II 2 G/D EEx e II T6** or **EEx ia IIC T6 IP66 T 58 °C**

Manufacturer: Cooper Crouse-Hinds GmbH

Address: Neuer Weg Nord 49,
69412 Eberbach, Germany

Description of supplements and modifications

The rated cross sections of the connecting cables for the branching box, type GHG 791 02.. R.... , with polyamide enclosure, are extended from 1.0 mm^2 to 10 mm^2.
When connecting a cable of 10 mm^2 rated cross section, the branching box will only have two terminal blocks and will be fitted with an earthing bracket which is suited for the rated cross section.
A new cross section table has been defined for the terminal box, type GHG 793 .... R.... .

Technical data

Rated voltage	up to	750	V
Rated current	max.	39	A
Rated cross section per terminal	max.	10	mm^2

The rated current, number of conductors, and conductor cross section are defined for the terminal boxes in the corresponding cross section table GHG 793 01.

Applied standards

EN 50014:1997 + A1 + A2 **EN 50019:2000**

Test report: PTB Ex 05-15089

Zertifizierungsstelle Explosionsschutz
By order:

Dr.-Ing. U. Klausmeier
Direktor und Professor

Braunschweig, June 2, 2005

EC-type-examination Certificates without signature and official stamp shall not be valid. The certificates may be circulated only without alteration. Extracts or alterations are subject to approval by the Physikalisch-Technische Bundesanstalt.
In case of dispute, the German text shall prevail.

Physikalisch-Technische Bundesanstalt • Bundesallee 100 • 38116 Braunschweig, Germany

Physikalisch-Technische Bundesanstalt

Braunschweig und Berlin

Physikalisch-Technische Bundesanstalt • Postfach 33 45 • 38023 Braunschweig

Cooper Crouse-Hinds GmbH
z. Hd. Frau Frankhauser

Neuer Weg Nord 49
69412 Eberbach

Ihr Zeichen:	
Ihre Nachricht vom:	30.07.2007
Unser Zeichen:	
Unsere Nachricht vom:	
Bearbeitet von:	Dr. Monika Schumann
Telefondurchwahl:	+49 (0) 531-592-3515
Telefaxdurchwahl:	+49 (0) 531-592-3415
E-Mail:	Monika.Schumann@ptb.de
Datum:	01.08.2007

Abzweigdosen bzw. Klemmenkästen Typ GHG 79. .... R...., PTB 00 ATEX 3108

Sehr geehrte Frau Frankhauser,

es bestehen keine sicherheitstechnischen Bedenken,
die oben genannten Abzweigdosen bzw. Klemmenkästen mit – getrennt bescheinigten – Komponenten in den Zündschutzarten Druckfeste Kapselung "d" und Vergusskapselung "m" zu bestücken.
Die Kennzeichnung des Gerätes ändert sich in:

II 2 G Ex e d m ia II, IIC T6

II 2 D IP 66 T 80 °C

Die Zusammensetzung des Zündschutzartkurzzeichens richtet sich nach den Zündschutzarten der jeweils verwendeten Komponenten.

Die Technischen Daten werden nicht geändert.

Durch Stückprüfung ist die Einhaltung der maximal zulässigen Temperatur für dieTemperaturklasse T6 unter Berücksichtigung der maximalen Umgebungstemperatur zu gewährleisten.

Die Einhaltung der Anforderungen der Normen EN 60079-0, EN 60079-1, EN 60079-7 und EN 60079-11 sind nach den Vorgaben der PTB (Merkblatt zur Ausstellung von EG-Konformitätserklärungen gemäß EU-RL 94/9/EG nach dem Erscheinen einer neuen Normenausgabe vom März 2007) zu überprüfen

Wir bitten Sie, diese Änderung bei einer zukünftigen Ergänzung mit aufzunehmen.

Mit freundlichen Grüßen
Im Auftrag

Dr. Schumann
Regierungsrätin

600 00 9

Hausadresse, Lieferanschrift:
Bundesallee 100
38116 Braunschweig
Deutschland

Telefon (Zentrale): 0531 592-0
Telefax (Zentrale): 0531 592-9292
E-Mail (Zentrale): poststelle@ptb.de
Internet: http://www.ptb.de

Achtung! Neue Bankverbindung:
Bundeskasse Halle
Landeszentralbank Halle
Konto: 800 010 00
BLZ: 800 000 00

PTB Berlin-Charlottenburg
Abbestraße 2-12
10587 Berlin
Deutschland

Physikalisch-Technische Bundesanstalt

Braunschweig und Berlin

Physikalisch-Technische Bundesanstalt • Postfach 33 45 • 38023 Braunschweig

Cooper-Crouse Hinds GmbH
z. Hd. Frau Frankhauser

Neuer Weg Nord 49
69412 Eberbach

Ihr Zeichen:	
Ihre Nachricht vom:	29.11.2007
Unser Zeichen:	
Unsere Nachricht vom:	
Bearbeitet von:	Dr. Monika Schumann
Telefondurchwahl:	+49 (0) 531-592-3515
Telefaxdurchwahl:	+49 (0) 531-592-3415
E-Mail:	Monika.Schumann@ptb.de
Datum:	19.12.2007

Normengenerationsänderung nach EN 60079-0 ff, EN 61241-0 ff
Abzweigdosen bzw. Klemmenkästen Typ GHG 79. .... R....
Branching or terminal boxes, type GHG 79. .... R....
PTB 00 ATEX 3108

Sehr geehrte Frau Frankhauser,

es bestehen keine sicherheitstechnischen Bedenken,

die Abzweigdosen bzw. Klemmenkästen Typ GHG 79. .... R.... mit folgenden Kennzeichnungen zu versehen:

Ex II 2 G Ex d e m ia II, IIC T6

Ex II 2 D Ex tD A21 IP66 T 80 °C

Wir bitten Sie, diese Änderungen bei zukünftigen Ergänzungen mit aufzunehmen.

Translation

there are no safety-related objections from PTB to mark
the branching or terminal boxes, type GHG 79. .... R.... as follows

Ex II 2 G Ex d e m ia II, IIC T6

Ex II 2 D Ex tD A21 IP66 T 80 °C

We would like to ask you to include this change into the next supplement.

Mit freundlichen Grüßen
Im Auftrag

Schumann

Dr. Schumann
Regierungsrätin

800 00 g

Hausadresse, Lieferanschrift:
Bundesallee 100
38116 Braunschweig
Deutschland

Telefon (Zentrale): 0531 592-0
Telefax (Zentrale): 0531 592-9292
E-Mail (Zentrale): poststelle@ptb.de
Internet: http://www.ptb.de

Achtung! Neue Bankverbindung:
Bundeskasse Halle
Landeszentralbank Halle
Konto: 800 010 00
BLZ: 800 000 00

PTB Berlin-Charlottenburg
Abbestraße 2-12
10587 Berlin
Deutschland

Physikalisch-Technische Bundesanstalt

Braunschweig und Berlin

Physikalisch-Technische Bundesanstalt • Postfach 33 45 • 38023 Braunschweig

Cooper-Crouse Hinds GmbH
z. Hd. Frau Frankhauser

Neuer Weg Nord 49
69412 Eberbach

Ihr Zeichen:	
Ihre Nachricht vom:	19.05.2008
Unser Zeichen:	
Unsere Nachricht vom:	
Bearbeitet von:	Dr. Monika Schumann
Telefondurchwahl:	+49 (0) 531-592-3515
Telefaxdurchwahl:	+49 (0) 531-592-3505
E-Mail:	Monika.Schumann@ptb.de
Datum:	6. Juni 2008

Ergänzung für den staub-explosionsgefährdeten Bereich, EN 61241-0 ff
Abzweigdosen bzw. Klemmenkästen Typ GHG 793 .... R....
Branching or terminal boxes, type GHG 793 .... R....
PTB 00 ATEX 3108

Sehr geehrte Frau Frankhauser,

es bestehen keine sicherheitstechnischen Bedenken,
die Abzweigdosen bzw. Klemmenkästen Typ GHG 793 .... R.... aus Aluminium auch in Bereichen einzusetzen, in denen damit zu rechnen ist, dass eine explosionsfähige Atmosphäre aus Staub/Luft-Gemischen gelegentlich auftritt.
Die Kennzeichnungen ändern sich in:

Ex II 2 G Ex d e ia m II, IIC T6

Ex II 2 D Ex tD A21 IP66 T 80 °C

Wir bitten Sie, diese Änderungen bei zukünftigen Ergänzungen mit aufzunehmen.

Translation

there are no safety-related objections from PTB to use the branching or terminal boxes,
type GHG 793 .... R.... out of Aluminium in areas in which explosive atmosphere caused by air/dust mixtures are likely to occur.
Hence the marking changes into:

Ex II 2 G Ex d e ia m II, IIC T6

Ex II 2 D Ex tD A21 IP66 T 80 °C

We would like to ask you to include this change into the next supplement.

Mit freundlichen Grüßen
Im Auftrag
Schumann

Dr. Schumann
Regierungsrätin

600 00 g

Hausadresse, Lieferanschrift:
Bundesallee 100
38116 Braunschweig
Deutschland

Telefon (Zentrale): 0531 592-0
Telefax (Zentrale): 0531 592-9292
E-Mail (Zentrale): poststelle@ptb.de
Internet: http://www.ptb.de

Achtung! Neue Bankverbindung:
Bundeskasse Halle
Landeszentralbank Halle
Konto: 800 010 00
BLZ: 800 000 00

PTB Berlin-Charlottenburg
Abbestraße 2-12
10587 Berlin
Deutschland

IECEx Certificate of Conformity

INTERNATIONAL ELECTROTECHNICAL COMMISSION
IEC Certification Scheme for Explosive Atmospheres

for rules and details of the IECEx Scheme visit www.iecex.com

Certificate No.: IECEx BKI 07.0034 issue No.:2

Status: **Current**

Date of Issue: **2012-02-13** Page 1 of 4

Certificate history:
Issue No. 2 (2012-2-13)
Issue No. 1 (2011-9-19)
Issue No. 0 (2007-10-2)

Applicant: **Cooper Crouse-Hinds GmbH**
previously CEAG Sicherheitstechnik GmbH
Neuer Weg Nord 49
D-69412 Eberbach, Germany
Germany

Electrical Apparatus: **Junction boxes and terminal boxes**
Optional accessory: Type GHG 791 01 and 791 02

Type of Protection: **General requirements, Increased safety, Intrinsic safety, Dust explosion protection**

Marking: Ex e II T6 for non intrinsically safe circuits only
Ex ia IIC T6 for intrinsically safe circuits only
-50 °C ≤ Tamb ≤ +45 °C
Ex tD A21 IP66 T58°C

Approved for issue on behalf of the IECEx Certification Body: János FEJES

Position: Director

Signature:
(for printed version) _____

Date: _____

1. This certificate and schedule may only be reproduced in full.
2. This certificate is not transferable and remains the property of the issuing body.
3. The Status and authenticity of this certificate may be verified by visiting the Official IECEx Website.

Certificate issued by:

Testing Station for Explosion Proof Equipment
H 1037 BUDAPEST
MIKOVINY S.u. 2-4
Hungary

Robbanásbiztos Berendezések ® BKI Vizsgáló Állomása Ex

IECEx Certificate of Conformity

Certificate No.: IECEx BKI 07.0034

Date of Issue: **2012-02-13** Issue No.: **2**

Page 2 of 4

Manufacturer: **Cooper Crouse-Hinds GmbH**
Neuer Weg Nord 49
D-69412 Eberbach, Germany
Germany

Additional Manufacturing location(s):
S.C. Cooper Industries Romania S.R.L.
Zona Industrial NV
Str. III, No. 12
ARAD, Romania
Romania

This certificate is issued as verification that a sample(s), representative of production, was assessed and tested and found to comply with the IEC Standard list below and that the manufacturer's quality system, relating to the Ex products covered by this certificate, was assessed and found to comply with the IECEx Quality system requirements. This certificate is granted subject to the conditions as set out in IECEx Scheme Rules, IECEx 02 and Operational Documents as amended.

STANDARDS:
The electrical apparatus and any acceptable variations to it specified in the schedule of this certificate and the identified documents, was found to comply with the following standards:

IEC 60079-0 : 2004 Edition: 4.0	Electrical apparatus for explosive gas atmospheres - Part 0: General requirements
IEC 60079-11 : 1999 Edition: 4	Electrical apparatus for explosive gas atmospheres - Part 11: Intrinsic safety 'i'
IEC 60079-7 : 2001 Edition: 3	Electrical apparatus for explosive gas atmospheres - Part 7: Increased safety 'e'
IEC 61241-0 : 2004 Edition: 1	Electrical apparatus for use in the presence of combustible dust - Part 0: General requirements
IEC 61241-1 : 2004 Edition: 1	Electrical apparatus for use in the presence of combustible dust - Part 1: Protection by enclosures "tD"

*This Certificate **does not** indicate compliance with electrical safety and performance requirements other than those expressly included in the Standards listed above.*

TEST & ASSESSMENT REPORTS:
A sample(s) of the equipment listed has successfully met the examination and test requirements as recorded in

Test Report:
HU/BKI/ExTR07.0033/00

Quality Assessment Report:

DE/BVS/QAR11.0006/01 DE/BVS/QAR11.0009/00 HU/BKI/QAR06.0005/01

IECEx Certificate of Conformity

Certificate No.: IECEx BKI 07.0034

Date of Issue: **2012-02-13** Issue No.: **2**

Page 3 of 4

Schedule

EQUIPMENT:
Equipment and systems covered by this certificate are as follows:

Junction boxes and terminal boxes made of polyamide of types GHG 791 01 and 791 02, intended for permanent installation, with built-in moduler or mantle terminals for non-intrinsically safe and intrinsically safe (certified separatly) circuits.

See details in Addendum to IECEx BKI 07.0034.

CONDITIONS OF CERTIFICATION: NO

IECEx Certificate of Conformity

Certificate No.: IECEx BKI 07.0034

Date of Issue: **2012-02-13** Issue No.: **2**

Page 4 of 4

DETAILS OF CERTIFICATE CHANGES (for issues 1 and above):

New manufacturing location: S.C. Cooper Industries Romania S.R.L.
Address: Zona Industrial NV, str. III, No. 12
ARAD, Romania

Annex: Addendum to IECEx BKI 07.0034.pdf

Betriebsanleitung
Operating instructions
Mode d'emploi

CROUSE-HINDS
SERIES

Explosionsgeschützte Abzweigdosen, Typ GHG 791 01 und GHG 791 02

Explosion protected junction boxes, type GHG 791 01 and GHG 791 02

Boites de dérivation, type GHG 791 01 et GHG 791 02 pour atmosphères explosives

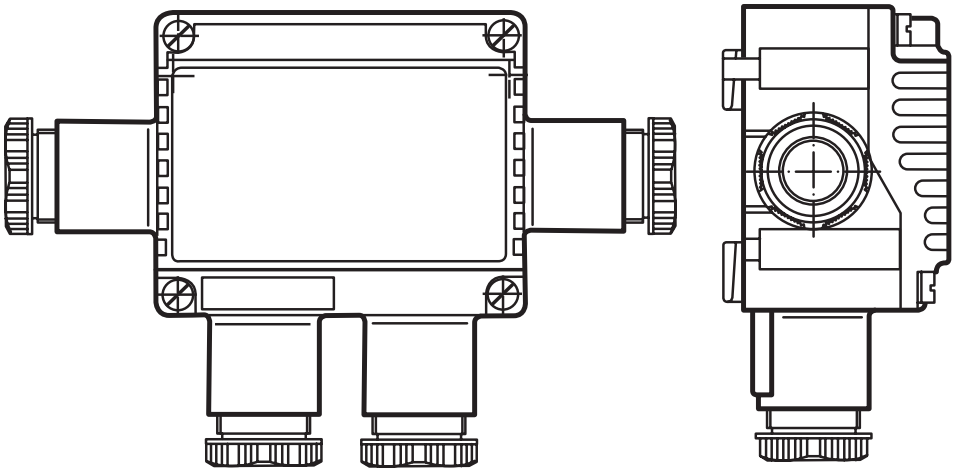

GHG 790 7001 P0002 D/E/F (L)

EATON
Powering Business Worldwide

Explosionsgeschützte Abzweigdosen, Typ GHG 791 01 und GHG 791 02

Inhalt:

Inhalt ... 2
Maßbild ... 3
1 Technische Angaben ... 3
2 Sicherheitshinweise ... 4
3 Normenkonformität ... 4
4 Verwendungsbereich ... 4
5 Verwendung/Eigenschaften ... 4
6 Installation ... 5
6.1 Montage ... 5
6.2 Öffnen des Gerätes/ Elektrischer Anschluss ... 5
6.3 Kabel- und Leitungs-einführung; Verschlussstopfen ... 5
6.4 Schließen des Gerätes ... 6
6.5 Inbetriebnahme ... 6
7 Instandhaltung / Wartung ... 6
8 Reparatur / Instand-setzung / Änderungen ... 6
9 Entsorgung / Wiederverwertung ... 6

Konformitätserklärung separat beigelegt.

Explosion protected junction boxes, type GHG 791 01 and GHG 791 02

Contents:

Contents ... 2
Dimensional drawings ... 7
1 Technical Data ... 7
2 Safety instructions ... 8
3 Conformity with standards ... 8
4 Field of application ... 8
5 Application / Properties ... 8
6 Installation ... 9
6.1 Mounting ... 9
6.2 Opening the device / Electrical connection ... 9
6.3 Cable entry (KLE); blanking plug ... 9
6.4 Closing the device ... 10
6.5 Taking into operation ... 10
7 Maintenance / Servicing ... 10
8 Repairs / Modification ... 10
9 Disposal / Recycling ... 10

Declaration of conformity, enclosed separately.

Boites de dérivation, type GHG 791 01 et GHG 791 02 pour atmosphères explosives

Contenu:

Contenu ... 2
Plans cotés ... 11
1 Caractéristiques techniques ... 11
2 Consignes de sécurité ... 12
3 Conformité avec les normes ... 12
4 Domaine d'utilisation ... 12
5 Utilisation / Propriétés ... 12
6 Installation ... 13
6.1 Montage ... 13
6.2 Ouverture de la boite / Raccordement électrique ... 13
6.3 Entrées de câble (KLE) bouchons de fermeture ... 13
6.4 Fermeture de la boite / Fermeture du couvercle ... 14
6.5 Mise en service ... 14
7 Maintien/Entretien ... 14
8 Réparation/Remise en état ... 14
9 Évacuation des déchets / Recyclage ... 14

Déclaration de conformité, jointe séparément.

Junction box GHG 791 02

Dimensions in mm

Junction box GHG 791 01

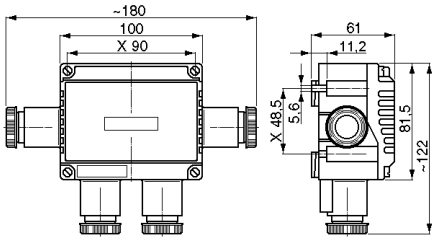

Junction box GHG 791 02

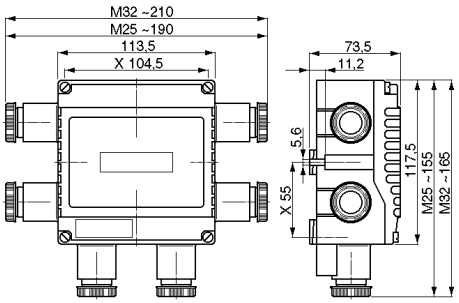

X = fixing dimensions

1 Technical data

Junction box GHG 791 01/GHG 791 02

EC type examination certificate:		PTB 00 ATEX 3108	
Marking acc. to 94/9/EC and standard:			
	EN 60079-0	Ⓔx II 2 G Ex e d m ia IIC T6 Ⓔx II 2 D Ex tD A21 IP 66 T80°C	
IECEx certificate:		IECEx BKI 07.0034	
Category of application:			
	IEC60079-0	Ex e d m ia IIC T6 Ex tD A21 IP 66 T80°C	
Rated voltage:		up to 690 V	
Rated current for GHG 791 01			
Rated current with	2.5 mm²:	max. 22 A(1)	
Rated current with	4.0 mm²:	max. 30 A(1)	
Rated current with	6.0 mm²:	max. 39 A(1)	
Rated current for GHG 791 02			
Rated current with	2.5 mm²:	max. 22 A	
Rated current with	4.0 mm²:	max. 30 A(1)	
Rated current with	6.0 mm²:	max. 39 A(1)	
Rated current with	10.0 mm²:	max. 22 A (with pin cable lug)	
Perm. ambient temperature: (Special versions permit deviating temperature ranges.)		-20° C up to +40° C (catalogue version)	
Perm. storage temperature in original packing:		-20° C up to +40° C	
Protection category acc. to EN/IEC 60529 :		IP 66 (catalogue version)	
Insulation class acc. to EC/IEC 61140:		I- with internal earth plate	
		II- is complied with by the junction boxes	
Supply terminal:		1 mm² up to 6 mm² cross-section	
GHG 791 01		4 supply terminals + 1 PE (4x4mm²)	
GHG 791 02		6 supply terminals + 2 PE (4x4mm²)	
		2 supply terminals + 1 PE (2x10 mm² with pin-terminal)	
Row terminals are possible in accordance to order and certification.			
Terminal capacity:		4 x 4 mm² single-strand	
		3 x 4 mm² multi-strand	
		3 x 6 mm² single-strand	
Max terminal capacity:		1 x 10 mm² single-strand with pin-terminal +	
		1 x 2.5 mm²	
	or	1 x 10 mm² multi-strand with pin-terminal +	
		1 x 2.5 mm²	
Cable entries GHG 791 01:		2x M25	Ø 10 – 17 mm
		4x M25	Ø 10 – 17 mm
with internal earth plate		4x M20 (drilling + 2 blanking plug)	
Cable entries GHG 791 02:		4x M25	
		6x M25	
		4x M32	
with internal earth plate		6x M20 (drilling + 4 blanking plug)	
Cable entries GHG 791 01 for 10 mm²		4x M25 plastic / metal	
Cable diameter and test torques of cap nut:			
Silicon seal	M25	Ø 4- 11 mm	1.6 Nm
Silicon seal	M25	Ø 8- 17 mm	1.5 Nm
EPDM seal	M25	Ø 10- 17 mm	4.5 Nm
EPDM seal	M32	Ø 12- 21 mm	4.0 Nm
Test torques:			
Terminals:		2.5 Nm	
Cover screws:		1.2 Nm	
Cap nut of the M32 entry:		4.0 Nm	
Weight GHG 791 01:		2 x M25	approx. 0.29 kg
		4 x M25	approx. 0.32 kg
		with internal earth plate	approx. 0.22 kg
Weight GHG 791 02:		4 x M25	approx. 0.50 kg
		6 x M25	approx. 0.55 kg
		4 x M32	approx. 0.55 kg
		6 x M32	approx. 0.65 kg
		with internal earth plate	approx. 0.50 kg

(1) At ambient temperature >40 °C use temperature resistent cable.

Junction box GHG 79101

Fig. 1

2 Safety instructions

The junction boxes are not suitable for Zone 0 and Zone 20 hazardous areas. The temperature class and explosion group marked on the junction boxes shall be observed.

The requirements of the IEC/EN 60079-14 regarding excessive dust deposits and temperature to be considered from the user.

They shall be used for their intended purpose and in perfect and clean condition.

Prior to taking the junction boxes into operation, they shall be checked in accordance with the instruction as per section 6.

Observe the national safety rules and regulations for prevention of accidents as well as the safety instructions included in these operating instructions and set in italics the same as this text!

3 Conformity with standards

They have been designed, manufactured and tested according to the state of the art and to DIN EN ISO 9001:2008 and
EN ISO/IEC 80079-34:2011.

The apparatus are conform to the standards specified in the EC-Declaration of conformity, enclosed separately.

4 Field of application

The junction boxes GHG 791 01 and GHG 791 02 are suitable for use in Zones 1 and 2 as well as in Zones 21 and 22 hazardous areas acc. to IEC/EN 60 079-10-1 and IEC/EN 60 079-10-2!

The enclosure materials employed, including the exterior metal parts, are made of high-quality materials which ensure a corrosion protection and resistance to chemical substances corresponding to the requirements in a "normal industrial atmosphere":
– impact resistant polyamide
– special steel AISI 316 L

In case of use in an extremely aggressive atmosphere, please refer to manufacturer.

5 Use/Properties

The junction boxes are intended for the distribution of electrical energy (e.g. light circuits, heater circuits, control circuits etc.) in hazardous areas up to max. 39A (see technical data). The temperature class, explosion group and permissible ambient temperature, see technical data.

If the conductor cross-section in the junction box is reduced, the maximum ampacity of the conductor with the smallest cross-section and the rated current of the junction box must be taken into account.

The junction boxes can also be used in a „normal industrial area".

The data as per point 3 and 4 shall be taken into account with the use.

Applications other than described are not permitted without Cooper Crouse-Hinds's prior written consent.

For the operation, the instructions stated in section 7 of the operating instructions shall be observed.

The user alone is responsible for the appropriate use of this junction box in consideration of the basic conditions existing at the plant (see technical data).

Fig. 2

Size 1 apparatus holder for GHG 791 01

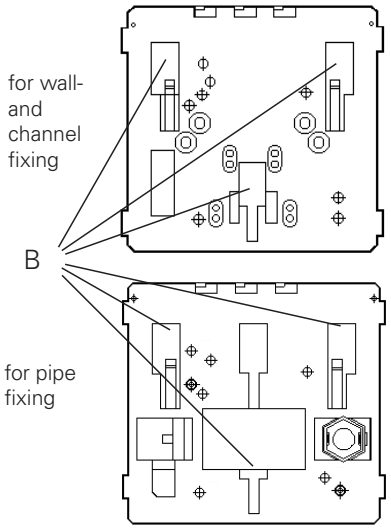

Size 2 apparatus holder for GHG 791 02

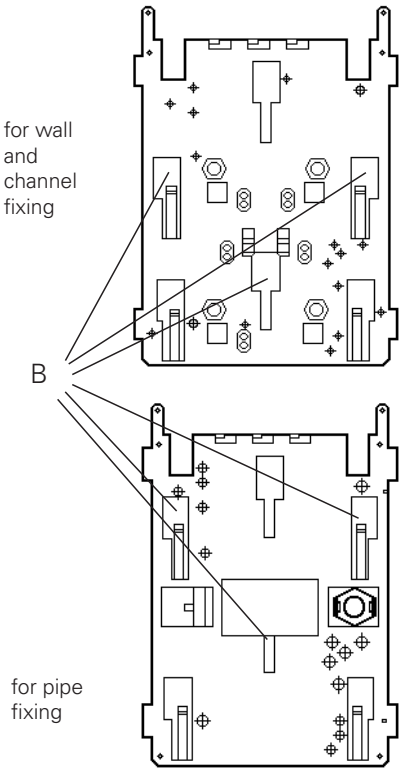

6 Installation

For the mounting and operation, the respective national regulations as well as the general rules of engineering shall be observed. (IEC/EN 60079-14).

6.1 Mounting

The junction boxes can be mounted without opening their enclosure.

In case the junction boxes are mounted directly onto the wall, they may rest evenly only at the respective fastening points. The chosen screw shall match the fastening hole (see dimensional drawing) and it must not damage the hole (e. g. use of a washer).

The device shall be fastened diagonally with at least 2 screws.

If the screws are overtightened, the apparatus can be damaged.

The junction boxes are suitable for fixing onto Cooper Crouse-Hinds apparatus holders size 1+ 2 by means of self-cutting screws (see fig. 2, fixing point "B").

The respective mounting instructions shall be observed.

6.2 Opening the device/ Electrical connection

Before opening the apparatus, it is necessary to ensure that there is no voltage or to take suitable protective measures.

The electrical connection of the device may only be carried out by skilled staff (IEC/EN 60079-14).

The insulation of the conductors shall reach up to the terminal. The conductor itself shall not be damaged.

The properly bared conductors of the cables shall be connected, taking into account the respective regulations.

The connectible min. and max. conductor cross-sections shall be observed (see technical data).

All screws and/or nuts of the supply terminals, also of those remaining unused, shall be tightened down.

The conductors shall be connected with special care in order to maintain the explosion category.

The supply terminals are designed for the connection of copper conductors.

If multi- or fine-wire connecting cables are used, the wire ends will have to be handled in acc. with the applicable national and international rules (e. g. use of ferrules).

If more than 4 cables are introduced into the GHG 791 02 junction box, one terminal block is to be fitted with the PE bridge joined.

6.3 Cable entries (KLE); blanking plugs

To maintain the minimum degree of protection all unused entries are to de closed using the Cooper Crouse-Hinds certifiedd blanking plugs which are supplied loose inside of the junction box (see page 4, fig. 1).

In case of sealing inserts that are cut out, it shall be ensured that the insert is properly adapted to the cable diameter. Care has to be taken that when fitting the cable entries, sealing inserts appropriate to the cable diameter are used.

When using cable entries for fixed cables it is necessary to ensure that no inadmissible high mechanical stress is applied to the cable entry or its seal.

In order to ensure the required minimum protection category, the cable glands are to be tightened down.

Overtightening might impair the protection category.

If metal glands are being used, the junction box version with the internal metal frame is to be used. To maintain the minimum degree of protection a sealing washer is to be used under the metal gland.

When using metal cable entries with a lower IP protection than that which applies to the device (see page 7, technical data), the IP protection of the whole device will be reduced.

The mounting directives applicable to the cable entries used shall be observed.

Attention: The metal frame and metal glands are to be integrated into the potential equalization.

6.4 Closing the device/ cover closure

Any foreign matter shall be removed from the apparatus.

In order to ensure the required minimum protection category, the cover screws are to be tightened down.

Overtightening might impair the protection category.

6.5 Taking into operation

Prior to taking the apparatus into operation, the tests specified in the relevant national regulations will have to be carried out.

Apart from that, the correct functioning and installation of the apparatus in accordance with these operating instructions and other applicable regulations will have to be checked.

Incorrect installation and use of the junction boxes can invalidate the guarantee.

7 Maintenance/Servicing

The relevant national regulations which apply to the maintenance/servicing of electrical apparatus in explosive atmospheres, shall be observed (IEC/EN 60079-17).

Before opening the enclosure make sure that the apparatus is disconnected from the voltage, or take the appropriate protective measures.

The required maintenance intervals depend on the respective application and will therefore have to be determined by the user dependent on the conditions of use.

When servicing the apparatus, particularly those parts that are decisive for the type of protection against explosion, will have to be checked.

⚠ **Cleaning:**
Because of the risk of an electrostatic charge, the junction boxes shall only be cleaned with a damp, non fibrous cloth or sponge!

hen servicing the apparatus, particularly those parts that are decisive for the type of protection against explosion, will have to be checked (e. g. intactness of enclosure, cable glands, efficacy of the cover gaskets).

If during servicing repairs prove to be necessary, section 8 of these operating instructions will have to be observed.

8 Repairs / Overhaul / Modification

Repairs may only be carried out with genuine Cooper Crouse-Hinds spare parts.

Repairs that affect the explosion protection, may only be carried out by Cooper Crouse-Hinds or a qualified electrician in compliance with the applicable national rules. (IEC/EN 60079-19).

Modifications to the apparatus or changes of its design are not permitted.

9 Disposal / Recycling

When the apparatus is disposed of, the respective national regulations on waste disposal will have to be observed.

In order to facilitate the recycling of individual components, plastic parts have been provided with the identification mark of the plastic material used.

Subject to modifications or supplement of the product range.

CZ: "Tento návod k použití si můžete vyžádat ve svém mateřském jazyce u příslušného zastoupení společnosti Cooper Crouse-Hinds/CEAG ve vaší zemi."

DK: "Montagevejledningen kan oversættes til andre EU-sprog og rekvireres hos Deres Cooper Crouse-Hinds/CEAG leverandør"

E: "En caso necesario podrá solicitar de su representante Cooper Crouse-Hinds/CEAG estas instrucciones de servicio en otro idioma de la Union Europea"

EST: "Seda kasutusjuhendit oma riigikeeles võite küsida oma riigis asuvast asjaomasest Cooper Crouse-Hindsi/CEAG esindusest."

FIN: "Tarvittaessa tämän käyttöohjeen käännös on saatavissa toisella EU:n kielellä Teidän Cooper Crouse-Hinds/CEAG - edustajaltanne"

GR: *Εαν χρειασθει, μεταφραση των οδηγιων χρησε ως σε αλλη γλωσσα της* EE, *μπορει να ζητηθει απο τον Αντιπροσωπο της* Cooper Crouse-Hinds/CEAG"

H: "A kezelési útmutatót az adott ország nyelvén a Cooper Crouse-Hinds/CEAG cég helyi képviseletén igényelheti meg."

I: "Se desiderate la traduzione del manuale operativo in un´altra lingua della Comunit à Europea potete richiederla al vostro rappresentante Cooper Crouse-Hinds/CEAG"

LT: Šios naudojimo instrukcijos, išverstos į Jūsu gimtąją kalbą, galite pareikalauti atsakingoje "Cooper Crouse-Hinds/CEAG" atstovybėje savo šalyje.

LV: "Šo ekspluatācijas instrukciju valsts valodā varat pieprasīt jūsu valsts atbildīgajā Cooper Crouse-Hinds/CEAG pārstāvniecībā."

M: Jistgħu jitolbu dan il-manwal fil-lingwa nazzjonali tagħhom mingħand ir-rappreżentant ta' Cooper Crouse Hinds/CEAG f'pajjiżhom.

NL: "Indien noodzakelijk kan de vertaling van deze gebruiksinstructie in een andere EU-taal worden opgevraagd bij Uw Cooper Crouse-Hinds/CEAG - vertegenwoordiging"

P: "Se for necessária a tradução destas instruções de operação para outro idioma da União Europeia, pode solicita-la junto do seu representante Cooper Crouse-Hinds/CEAG"

PL: Niniejszą instrukcję obsługi w odpowiedniej wersji językowej można zamówić w przedstawicielstwie firmy Cooper-Crouse-Hinds/CEAG na dany kraj.

S: "En översättning av denna montage- och skötselinstruktion till annat EU - språk kan vid behov beställas från Er Cooper Crouse-Hinds/CEAG- representant"

SK: "Tento návod na obsluhu Vám vo Vašom rodnom jazyku poskytne zastúpenie spoločnosti Cooper Crouse-Hinds/CEAG vo Vašej krajine."

SLO: "Navodila za uporabo v Vašem jeziku lahko zahtevate pri pristojnem zastopništvu podjetja Cooper Crouse-Hinds/CEAG v Vaši državi."

RUS: "При необходимости, вы можете запрашивать перевод данного руководства на другом языке ЕС или на русском от вашего Cooper Crouse-Хиндс / CEAG - представителей."

Eaton is dedicated to ensuring that reliable, efficient and safe power is available when it's needed most. With unparalleled knowledge of electrical power management across industries, experts at Eaton deliver customized, integrated solutions to solve our customers' most critical challenges.

Our focus is on delivering the right solution for the application. But, decision makers demand more than just innovative products. They turn to Eaton for an unwavering commitment to personal support that makes customer success a top priority. For more information, visit

www.eaton.com/electrical.

Powering Business Worldwide

Cooper Crouse-Hinds GmbH
Neuer Weg-Nord 49
69412 Eberbach
E-Mail: Info-Ex@Eaton.com
www.crouse-hinds.de

© 2015 Eaton
All Rights Reserved
Printed in Germany
Publication No.
GHG 790 7001 P0002 D/E/F (L)
Auflage 20.15/CS

Changes to the products, to the information contained in this document, and to prices are reserved; so are errors and omissions. Only order confirmations and technical documentation by Eaton is binding. Photos and pictures also do not warrant a specific layout or functionality. Their use in whatever form is subject to prior approval by Eaton. The same applies to Trademarks (especially Eaton, Moeller, and Cutler-Hammer). The Terms and Conditions of Eaton apply, as referenced on Eaton Internet pages and Eaton order confirmations.

Eaton is a registered trademark.

All trademarks are property of their respective owners.

CEAG

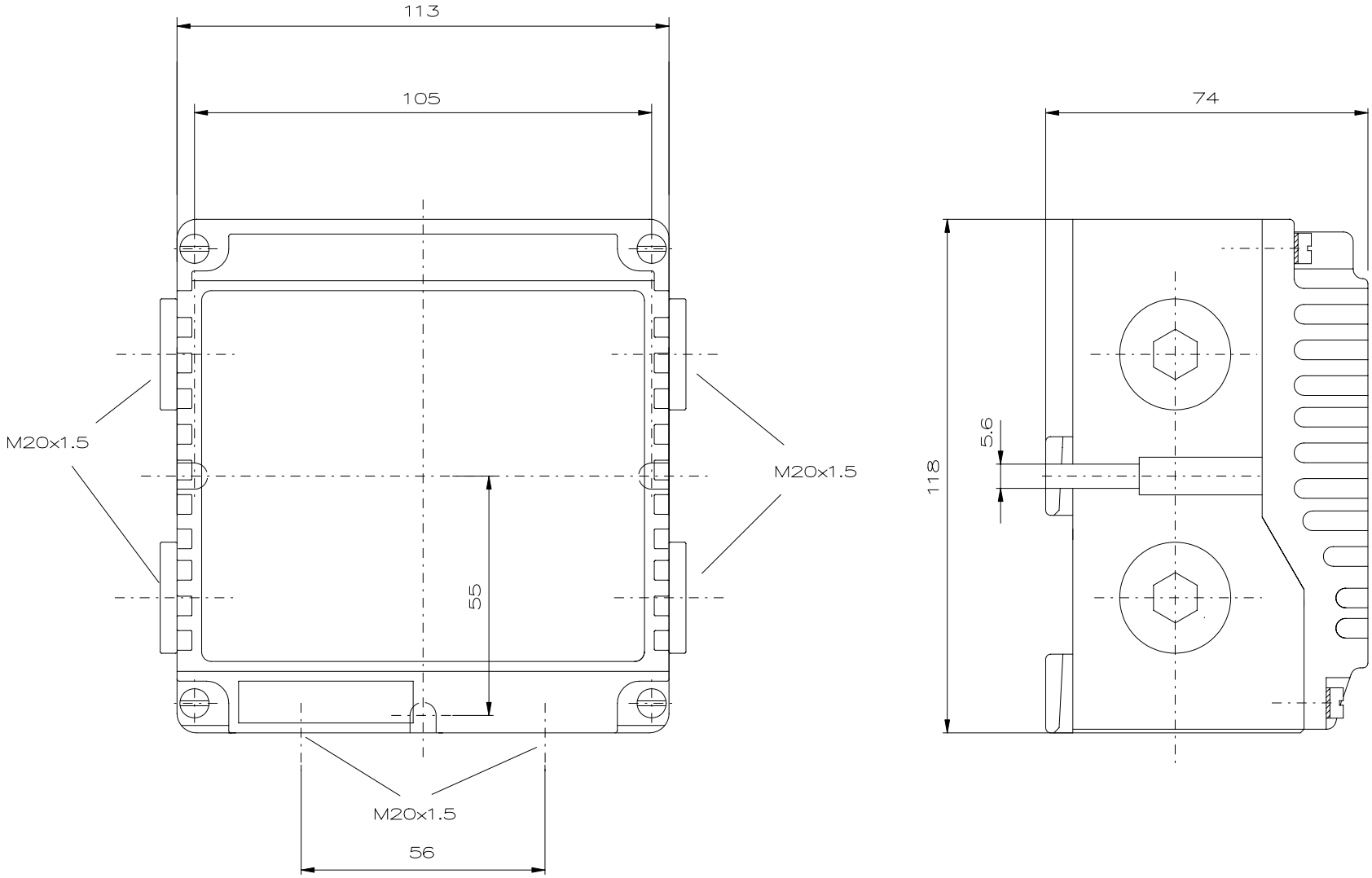

"Schutzvermerk nach DIN 34 beachten" / "Copyright reseved"

Designed with CAD-System ESP32

Description:	Junction box Ex–e 791 02 6 x M20
Beschreibung:	Abzweigdose Ex–e 791 02 6 x M20

COOPER Crouse-Hinds

Rev.st/ Zust.	Revision/ Änderung	Date/ Datum	Name/ Name

Date/ Datum	17.10.2008
Expert/ Bearbeiter	Röther
1:1	Dimension unit: mm Maßeinheit: mm

Material-No.:/ Material-Nr.:

GHG7910201R0003

COOPER Crouse-Hinds

EG-Konformitätserklärung
EC-Declaration of conformity
CE-Déclaration de conformité
PTB 00 ATEX 3108[1]

GHG 900 1000 P0100 D

Wir / we / nous

Cooper Crouse-Hinds GmbH
Neuer Weg-Nord 49
D-69412 Eberbach

erklären in alleiniger Verantwortung, dass das Produkt
hereby declare in our sole responsibility, that the product
déclarons de notre seule responsabilité, que le produit

Abzweigdosen / Klemmenkästen
junction boxes / terminal boxes
boites de dérivation / boites de bornes

Ⓔx II 2 G / Ⓔx II 2 D

GHG 791 …

den folgenden EU-Richtlinien, den entsprechenden harmonisierten Normen, und weiteren normativen Dokumenten entspricht.
complies with the following EU directives, their corresponding harmonised standards, and other normative documents.
correspond aux directives européennes suivantes, à leurs normes harmonisées, et aux autres documents normatifs suivants.

Bestimmungen der Richtlinie Terms of the directive Prescription de la directive		Titel und / oder Nr. sowie Ausgabedatum der Norm. Title and / or No. and date of issue of the standard. Titre et / ou No. ainsi que date d'émission des normes.
94/9/EG: *94/9/EC:* *94/9/CE:*	Geräte und Schutzsysteme zur bestimmungsgemäßen Verwendung in explosionsgefährdeten Bereichen. *Equipment and protective systems intended for use in potentially explosive atmospheres.* *Appareils et systèmes de protection destinés à être utilisés en atmosphères explosibles.*	EN 60 079-0: 2009 EN 60 079-1: 2007 [x] EN 60 079-7: 2007 EN 60 079-11: 2007 [x] EN 60 079-18: 2009 [x] EN 60 079-31: 2009
		EN 60 529: 1991 + A1: 2000 EN 60 947-1: 2007
2004/108 EG: *2004/108 EC:* *2004/108 CE:*	Elektromagnetische Verträglichkeit *Electromagnetic compatibility* *Compatibilité électromagnétique*	EN 60 947-1: 2007
2011/65 EU: *2011/65 EU:* *2011/65 UE:*	RoHS –Richtlinie *RoHS - directive* *Directive RoHS*	EN 50 581: 2012

(x) je nach angewandter Zündschutzart, acc. to type of protection, selon type de protection

15.02.2013

Datum
date
date

Die Original-Konformitätserklärung ist dem Produkt beigelegt !
The original declaration of conformity is supplied in the packing with the product !
La déclaration originale de conformité sera fournie avec le produit !

[1] Benannte Stelle (EG-Baumusterprüfbescheinigung)
Notified body of the certification
Organe notifié et compétent

Physikalisch-Technische Bundesanstalt (0102)
Bundesallee 100
D-38116 Braunschweig

Benannte Stelle (Qualitätssicherung Produktion)
Notified body to quality evaluation
Organe d'attestation de conformité

DEKRA EXAM GmbH (0158)
Dinnendahlstraße 9
D-44809 Bochum

Für den sicheren Betrieb des Betriebsmittels sind die Angaben der zugehörigen Betriebsanleitung zu beachten.
For the safe use of this apparatus, the information given in the accompanying operating instructions must be followed.
Afin d'assurer le bon fonctionnement de nos appareils, prière de respecter les directives du mode d'emploi correspondant à ceux-ci.

CEAG