Ordering details

Type	Content	Terminals	Through-wiring single-ended	Through-wiring twin-ended	Cable gland/ thread	Threaded plug	Blanking plug	Order No.
 **eLLB 20018/18**								
eLLB 20018/18 (2 x 18 W)	2/6-2K painted	2 x 6	–	x	2 x M25, plastic	2 x M25		**1 2190 218 001**
eLLB 20018/18 (2 x 18 W)	2/6-2K st. steel	2 x 6	–	x	2 x M25, plastic	2 x M25		**1 2190 218 011**
eLLB 20018/18 (2 x 18 W)	2/6-2M [1] painted	2 x 6	–	x	4 x M20, metal thread	2 x M20		**1 2190 218 101**
eLLB 20018/18 (2 x 18 W)	2/6-2M [1] st. steel	2 x 6	–	x	4 x M20, metal thread	2 x M20		**1 2190 218 111**
 **eLLB 20036/36**								
eLLB 20036/36 (2 x 36 W)	2/6-2K [1] painted	2 x 6	–	x	2 x M25, plastic	2 x M25	1	**1 2190 236 001**
eLLB 20036/36 (2 x 36 W)	2/6-2K st. steel	2 x 6	–	x	2 x M25, plastic	2 x M25	1	**1 2190 236 011**
eLLB 20036/36 (2 x 36 W)	2/6-2M [1] painted	2 x 6	–	x	4 x M20, metal thread	2 x M20		**1 2190 236 101**
eLLB 20036/36 (2 x 36 W)	2/6-2M [1] st. steel	2 x 6	–	x	4 x M20, metal thread	2 x M20		**1 2190 236 111**
 **eLLB 20058/58**								
eLLB 20058/58 (2 x 36 W)	2/6-2K [1] painted	2 x 6	–	x	2 x M25, plastic	2 x M25	1	**1 2190 258 001**
eLLB 20058/58 (2 x 36 W)	2/6-2K st. steel	2 x 6	–	x	2 x M25, plastic	2 x M25	1	**1 2190 258 011**
eLLB 20058/58 (2 x 36 W)	2/6-2M [1] painted	2 x 6	–	x	4 x M20, metal thread	2 x M20		**1 2190 258 101**
eLLB 20058/58 (2 x 36 W)	2/6-2M [1] st. steel	2 x 6	–	x	4 x M20, metal thread	2 x M20		**1 2190 258 111**
 **eLLB 20418**								
eLLB 20418 (4 x 18 W)	2/6-2K [1] painted	2 x 6	–	x	2 x M25, plastic	2 x M25	1	**1 2190 418 001**
eLLB 20418 (4 x 18 W)	2/6-2K st. steel	2 x 6	–	x	2 x M25, plastic	2 x M25	1	**1 2190 418 011**
eLLB 20418 (4 x 18 W)	2/6-2M [1] painted	2 x 6	–	x	4 x M20, metal thread	2 x M20		**1 2190 418 101**
eLLB 20418 (4 x 18 W)	2/6-2M [1] st. steel	2 x 6	–	x	4 x M20, metal thread	2 x M20		**1 2190 418 111**
 **eLLB 20436**								
eLLB 20436 (4 x 36 W)	2/6-2K [1] painted	2 x 6	–	x	2 x M25, plastic	2 x M25	1	**1 2190 436 001**
eLLB 20436 (4 x 36 W)	2/6-2K st. steel	2 x 6	–	x	2 x M25, plastic	2 x M25	1	**1 2190 436 011**
eLLB 20436 (4 x 36 W)	2/6-2M [1] painted	2 x 6	–	x	4 x M20, metal thread	2 x M20		**1 2190 436 101**
eLLB 20436 (4 x 36 W)	2/6-2M [1] st. steel	2 x 6	–	x	4 x M20, metal thread	2 x M20		**1 2190 436 111**
 **eLLB 202217**								
eLLB 202217/U240 (2 x 17 W) [2]	2/6-2M [1] NPT - painted	2 x 6	–	x	2 x 3/4'' NPT Myers Hub Adapter, 2 x metal thread	2 x M25		**1 2190 217 101**
eLLB 202217/U240 (2 x 17 W) [2]	2/6-2M [1] NPT - st. steel	2 x 6	–	x	2 x 3/4'' NPT Myers Hub Adapter, 2 x metal thread	2 x M25		**1 2190 217 111**
 **eLLB 204232**								
eLLB 204232/U240 (2 x 32 W) [2]	2/6-2M [1] NPT - painted	2 x 6	–	x	2 x 3/4'' NPT Myers Hub Adapter, 2 x metal thread	2 x M25		**1 2190 232 101**
eLLB 204232/U240 (2 x 32 W) [2]	2/6-2M [1] NPT - st. steel	2 x 6	–	x	2 x 3/4'' NPT Myers Hub Adapter, 2 x metal thread	2 x M25		**1 2190 232 111**

[1] with metal thread, without cable gland / [2] for use according to NEC-standards
Scope of delivery without lamp and fixing accessories
Metal cable glands see catalogue part 2: 2.3.12 ff

Dimension drawing / Polar curve

eLLB 20 ...

Polar curve eLLB 20018/18 / eLLB 20036/36 / eLLB 20058/58

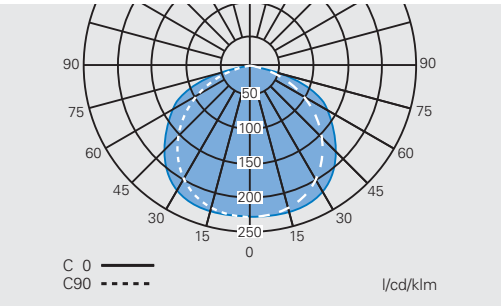

Polar curve eLLB 20418 eLLB 20436

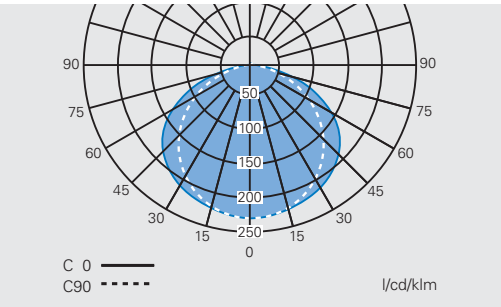

eLLB ...

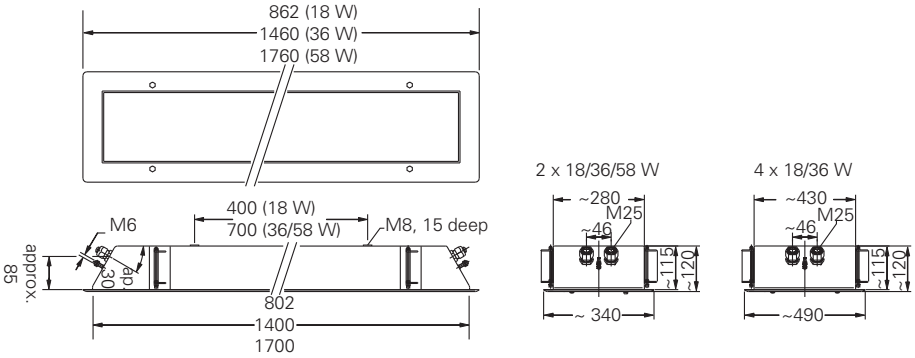

eLLB ...

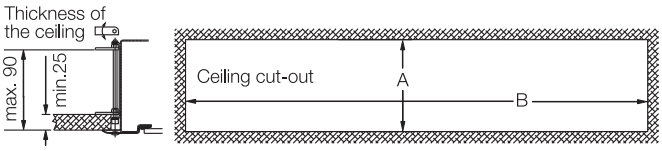

	A	B
eLLB 20018/18	315+3	832+5
eLLB 20036/36	315+3	1432+5
eLLB 20058/58	315+3	1732+5
eLLB 20418	465+3	832+5
eLLB 20436	465+3	1432+5

Dimensions in mm

Technical data

	eLLB 20018/18	eLLB 20036/36
EC-Type Examination Certificate	DMT 02 ATEX E 069	DMT 02 ATEX E 069
IECEx Certificate of Conformity	IECEx BKI 08.0017	IECEx BKI 08.0017
Marking accd. to 94/9/EC	Ⓔx II 2 G Ex de IIC T4 Ⓔx II 2 D Ex tD A21 IP66 T80 °C	Ⓔx II 2 G Ex de IIC T4 Ⓔx II 2 D Ex tD A21 IP66 T80 °C
Marking accd. to IECEx	Ex edmb IIC T4 Gb Ex tb IIIC IP66 T 80 °C Db	Ex edmb IIC T4 Gb Ex tb IIIC IP66 T 80 °C Db
Permissible ambient temperature	-25 °C up to +50 °C	-25 °C up to +50 °C
IK-class according to EN 50102	IK 10 ≙ 20 J	IK 10 ≙ 20 J
Rated voltage	110 - 254 V AC 110 - 250 V DC	110 - 254 V AC 110 - 250 V DC
Rated current	0.18 A	0.34 A
Frequency	50 - 60 Hz	50 - 60 Hz
Power factor cos φ	≥ 0.95	≥ 0.95
Circuit	EVG	EVG
Protection class	I	I
Lamp / Illuminant	2 x T26 / 18 W (T8)	2 x T26 / 36 W (T8)
Rated luminous flux	2700 lm [1]	6700 lm [1]
Lamp cap	G13 accd. to IEC 60061-1	G13 accd. to IEC 60061-1
Light efficiency in operation	70%	70%
Dimensions (L x W x H)	862 x 340 x 120 mm	1460 x 340 x 120 mm
Connecting terminals	L1, L2, L3, L, N, PE; max. 2 x 6 mm^2 per terminal, through-wiring twin-ended	L1, L2, L3, L, N, PE; max. 2 x 6 mm^2 per terminal, through-wiring twin-ended
Enclosure colour	white RAL 9010	white RAL 9010
Enclosure material	painted steel sheet, white optional polished stainless steel	painted steel sheet, white optional polished stainless steel
Weight	15 kg	22 kg
Cable glands / gland plates / enclosure drilling	Ex-e cable glands M25 x 1.5 (plastic) for cables from Ø 8 - 17 mm, option: M20 x 1.5 metal thread [2]	Ex-e cable glands M25 x 1.5 (plastic) for cables from Ø 8 - 17 mm, option: M20 x 1.5 metal thread [2]
Degree of protection accd. to EN 60529	IP66	IP66
Protective cover / protective bowl	single-safety glass pane of 6 mm thick	single-safety glass pane of 6 mm thick
Permissible ceiling tickness for fixing accessories	min. 25 mm to max. 90 mm	min. 25 mm to max. 90 mm

[1] depends on used lamps
[2] with dustcover if entry/thread is not closed

CEAG

Explosionsgeschützte Deckeneinbauleuchten

Explosion Protected Recessed Ceiling light fittings

Luminaires dans le plafond pour atmosphères explosives

eLLB 20.. /eLLB 20.. CG-S

300 8000 1447 (G)

Ex

CE

Betriebsanleitung

Operating instructions

Mode d'emploi

COOPER Crouse-Hinds

CZ: "Tento návod k použití si můžete vyžádat ve svém mateřském jazyce u příslušného zastoupení společnosti Cooper Crouse-Hinds/CEAG ve vaší zemi."

DK: "Montagevejledningen kan oversættes til andre EU-sprog og rekvireres hos Deres Cooper Crouse-Hinds/CEAG leverandør"

E: "En caso necesario podrá solicitar de su representante Cooper Crouse-Hinds/CEAG estas instrucciones de servicio en otro idioma de la Union Europea"

EST: "Seda kasutusjuhendit oma riigikeeles võite küsida oma riigis asuvast asjaomasest Cooper Crouse-Hindsi/CEAG esindusest."

FIN: "Tarvittaessa tämän käyttöohjeen käännös on saatavissa toisella EU:n kielellä Teidän Cooper Crouse-Hinds/CEAG - edustajaltanne"

GR:Εαν χρειασθει, μετα.ραση των οδηγιων χρησε ως σε αλλη γλωσσα της ΕΕ, μπορει να ζητηθει απο τον Αντιπροσωπο της Cooper Crouse-Hinds/CEAG"

H: "A kezelési útmutatót az adott ország nyelvén a Cooper Crouse-Hinds/CEAG cég helyi képviseletén igényelheti meg."

I: "Se desiderate la traduzione del manuale operativo in un´altra lingua della Comunit à Europea potete richiederla al vostro rappresentante Cooper Crouse-Hinds/CEAG"

LT: Šios naudojimo instrukcijos, išverstos į Jūsų gimtąją kalbą, galite pareikalauti atsakingoje "Cooper Crouse-Hinds/CEAG" atstovybeje savo šalyje.

LV: "Šo ekspluatācijas instrukciju valsts valodā varat pieprasīt jusu valsts atbildīgajā Cooper Crouse-Hinds/CEAG pārstāvniecībā."

M: Jistgħu jitolbu dan il-manwal fil-lingwa nazzjonali tagħhom mingħand ir-rappreżentant ta' Cooper Crouse Hinds/CEAG f'pajjiżhom.

NL: "Indien noodzakelijk kan de vertaling van deze gebruiksinstructie in een andere EU-taal worden opgevraagd bij Uw Cooper Crouse-Hinds/CEAG - vertegenwoordiging"

P: "Se for necessária a tradução destas instruções de operação para outro idioma da União Europeia, pode solicita-la junto do seu representante Cooper Crouse-Hinds/CEAG"

PL: Niniejszą instrukcję obsługi w odpowiedniej wersji językowej można zamówić w przedstawicielstwie firmy Cooper-Crouse-Hinds/CEAG na dany kraj.

S: "En översättning av denna montage- och skötselinstruktion till annat EU - språk kan vid behov beställas från Er Cooper Crouse-Hinds/CEAG- representant"

SK: "Tento návod na obsluhu Vám vo Vašom rodnom jazyku poskytne zastúpenie spoločnosti Cooper Crouse-Hinds/CEAG vo Vašej krajine."

SLO: "Navodila za uporabo v Vašem jeziku lahko zahtevate pri pristojnem zastopništvu podjetja Cooper Crouse-Hinds/CEAG v Vaši državi."

COOPER Crouse-Hinds GmbH

Neuer Weg - Nord 49
D 69412 Eberbach / Germany
Fone +49 (0) 6271/806 - 500
Fax +49 (0) 6271/806 - 476
Internet: http://www.CEAG.de
E-Mail: sales.cch.de@cooperindustries.com

Schaltplan Serie eLLB 20..(18W, 36W, 58 W)
Wiring diagram series eLLB 20.. (18W, 36W, 58 W)
Schéma des connexions, série eLLB 20.. (18W, 36W, 58 W)

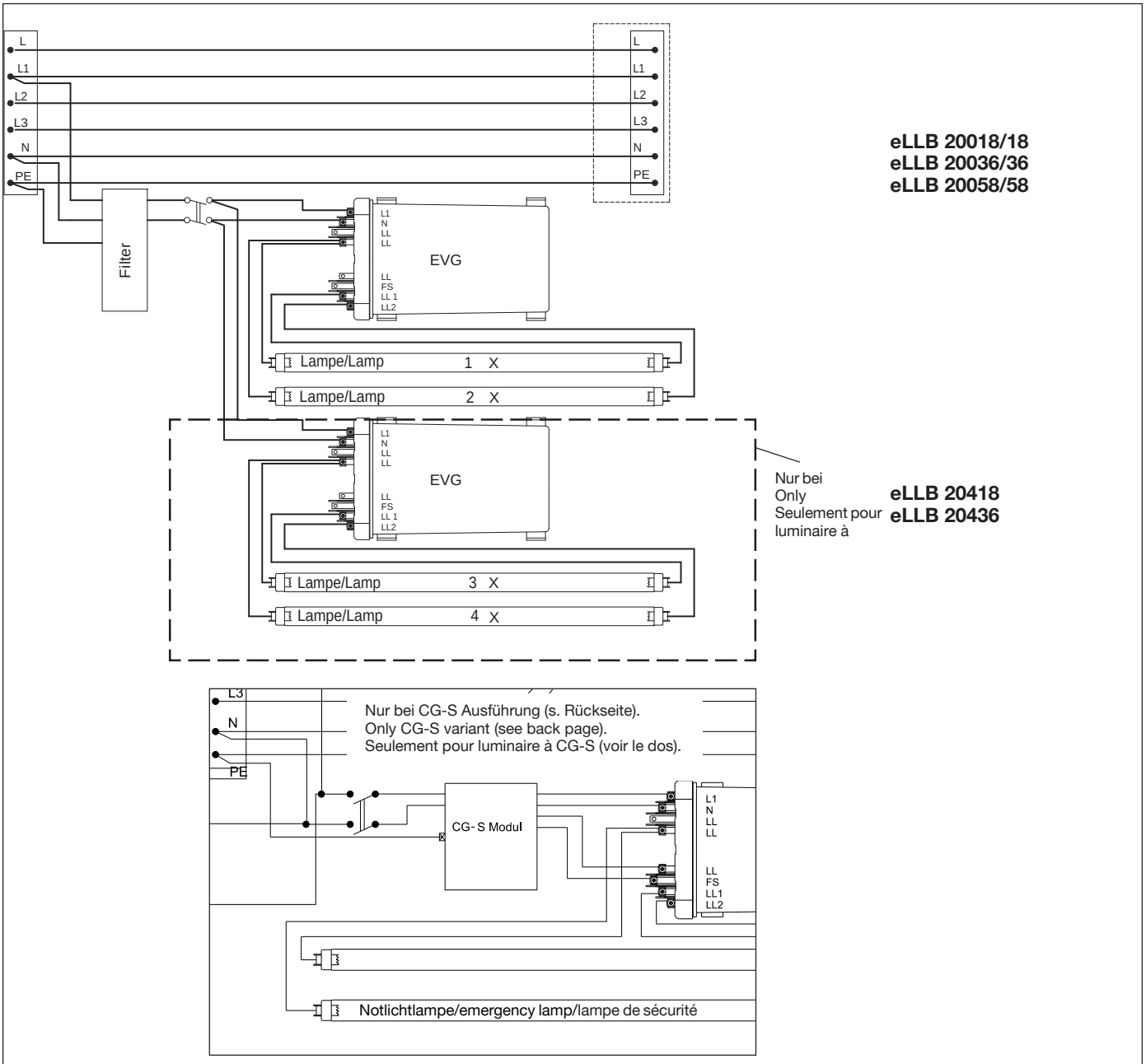

– Klemme L dient zur Dauerstromversorgung von Notleuchten.
– Terminal L serves for permanent current supply of emergency luminaires.
– La borne L sert à l'alimentation en courant permanent des luminaires de sécurité.

Ausführung/ Version/Modèle	**2 x 18 W (4 x 18 W)**	**2 x 36 W (4 x 36 W)**	**2 x 58 W**	**2 x 18 W CG-S (4 x 18 W CG-S)**	**2 x 36 W CG-S (4 x 36W CG-S)**	**2 x 58 W CG-S**
Spannungsbereich AC voltage range AC Gamme des tensions CA	110- 254 V	110 - 254 V	220 - 254 V	220 - 254 V	220 - 254 V	220 - 254 V
Frequenzbereich/Frequency range Gamme des fréquences	50 - 60 Hz	50 - 60 Hz	50 - 60 Hz	50 - 60Hz	50 - 60 Hz	50 - 60 Hz
Spannungsbereich DC / Voltage range DC Gamme des tensions CC	195 - 250 V 110 - 127 V	110 - 250 V	195 - 250 V	195 - 250 V	195 - 250 V	195 - 250 V
kurzzeitige Überspannung AC/DC Transient excess voltage AC/DC Surtension transitoire CA/CC		<350 V				
Nennstrom in/A Rated current/A Courant nom. en A avec: 230 V AC 220 V DC	 0,18 (0,36) 0,19 (0,37)	 0,34 (0,68) 0,35 (0,69)	 0,53 (1,06) 0,54 (1,07)	 0,19 (0,37) 0,11 (0,12)	 0,35 (0,69) 0,19 (0,20)	 0,54 0,27

Montagebilder/Maßzeichnung
Illustrations for mounting/Dimensional drawing
Illustrations du montage/

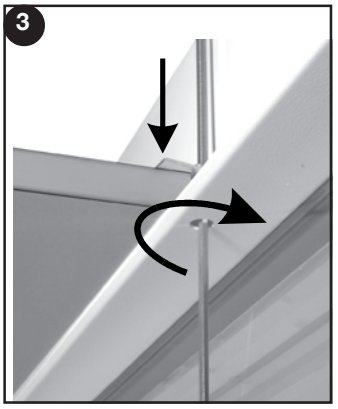

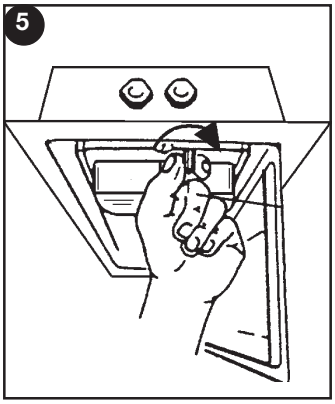

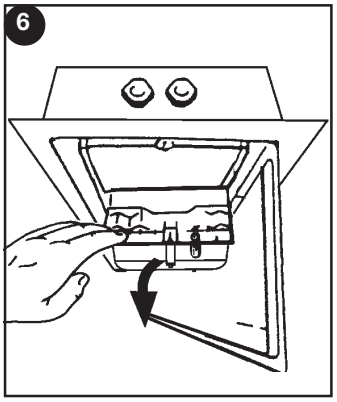

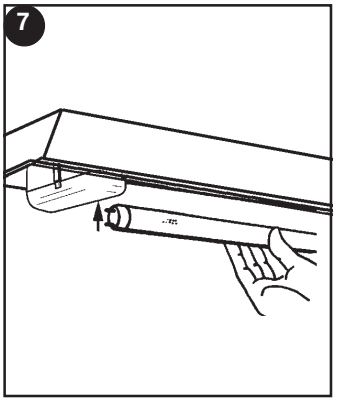

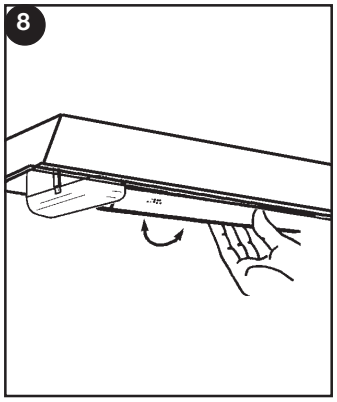

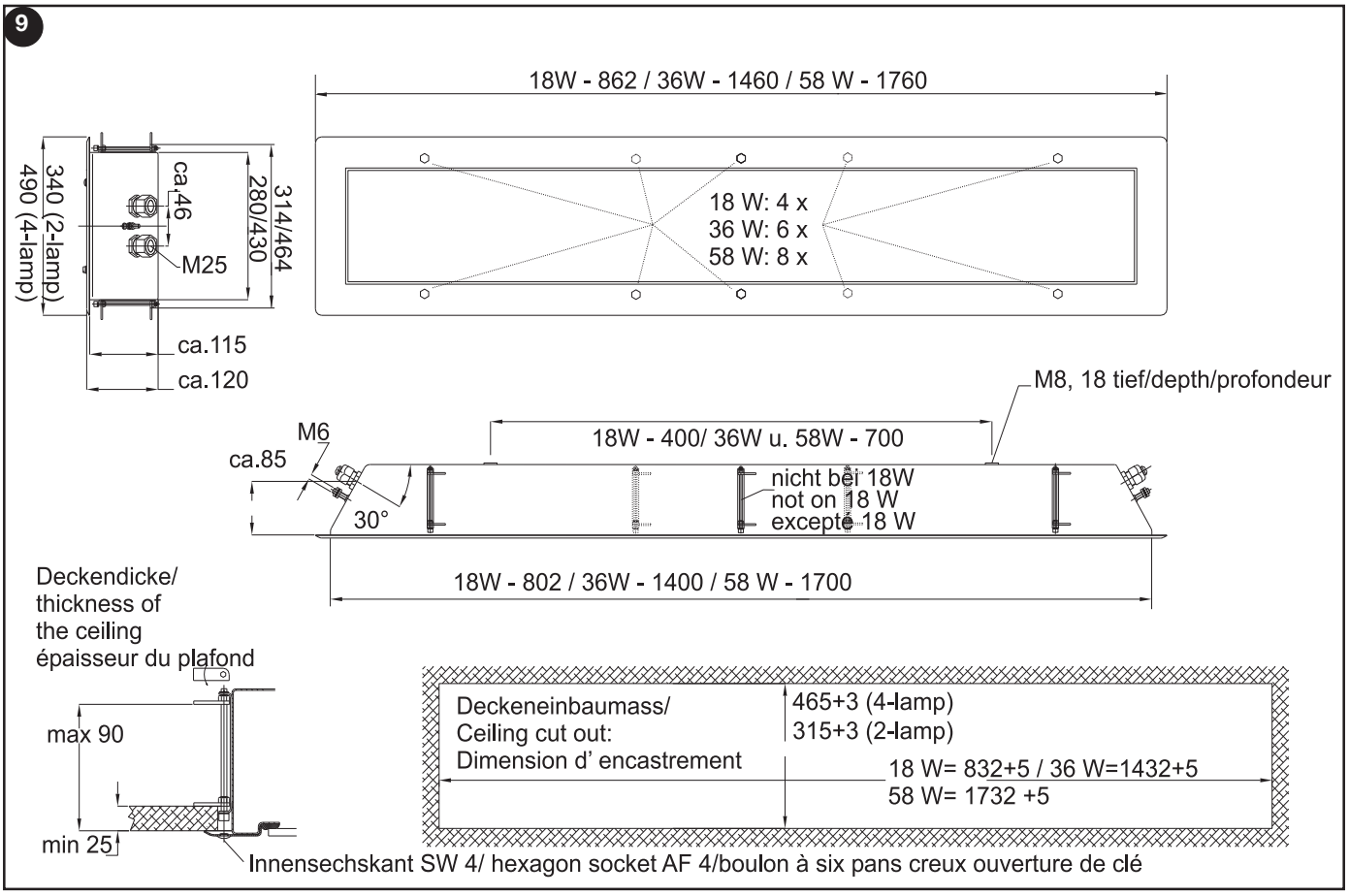

1. Safety instructions

For skilled electricians and instructed personnel in accordance with national legislation, including the relevant standards and, where applicable, in acc. with IEC 60079-17 on electrical apparatus for explosive atmospheres.

- ❒ The light fitting must not be operated in zone 0 and 20 hazardous areas!
- ❒ The requirements of the EN 61241-0 and -1 regarding excessive dust deposits and temperature to be considered from the user.
- ❒ The technical data indicated on the light fitting are to be observed!
- ❒ Changes of the design and modifications to the light fitting are not permitted!
- ❒ The light fitting shall be operated as intended and only in undamaged and perfect condition!
- ❒ Only genuine Cooper Crouse-Hinds (CCH)CEAG spare parts may be used for replacement!
- ❒ Repairs that affect the explosion protection (see national standard), may only be carried out by CCH/CEAG or a qualified "electrician"!
- ❒ Do not keep these operating instructions inside the light fitting during operation!
- ❒ **The national safety rules and regulations for prevention of accidents and the following safety instructions which are marked with an (⚠) in these operating instruction, will have to be observed!**

2. Conformity with standards

The light fitting is suitable for use in zone 1, 21, 2 and 22 hazardous areas acc. to EN 60079-14 and IEC 60079-10.
The light fitting is conform to the standards specified in the EC-Declaration of conformity, enclosed separately.
The EVG 05 fulfills the requirements of the draft IEC 60079-7 Ed. 4 (EOL) and the IEC 61347-2-3 (§17.2 and §17.3).
It has been designed, manufactured and tested according to the state of the art and according to DIN EN ISO 9001: 2000.

3. Technical data

EC type examination certificate:	DMT 02 ATEX E 069	
Category of application:		
	Ⓔx II 2 G Ex dem IIC T4	
(CG-S version)	Ⓔx II 2 G Ex dem ib IIC T4	
	Ⓔx II 2 D Ex tD A21 IP66 T80°C	
Approval of the production quality assurance:	PTB 96 ATEX Q001-4	
Insulation class to EN 60 598:	I	
Degree of protection accd. to en 60529	IP66	
Permissable ambient temperatures [1]		
eLL. 92	-25 °C to +50 °C	
storage temperature in original packing:	-25 °C to +60 °C	
Fluorescent lamps:		
- Single pin lamps	Fa6 accd. IEC 60061-1	
- Bi-pin lamps		
eLLB 20 018...	IEC 60081-22/20	
eLLB 20 036...	IEC 60081-24/20	
eLLB 20058...	IEC 60081-21/22	
Supply terminal clamping capacity 2 x per terminal:	single-wire	multi-wire
min.	1.5 mm²	1.5 mm²
max.	6.0 mm²	6.0 mm²
Conductor cross-section with through-wiring:	2.5 mm² for max. 16 A	
Ex-e cable entry standard version:	M25x1.5 for cable Ø (8 to 17 mm)	
metal thread:	M20x1.5	
Test torque for M 25 x 1.5 Ex-e cable entry:	5.0 Nm	
Test torque for pressure screw:	3.5 Nm (for sealing of the cable or the blanking plug)	
Test torque for cover pane screw:	1.5 Nm	
Weight 18/36/58 W (2-lamps):	approx. 15/ 22/ 26 kg	
18/36 W (4-lamps)	approx 25/34 kg	

4. Installation

⚠ The respective national regulations as well as the general rules of engineering which apply to the installation and operation of explosion protected apparatus will have to be observed!
Transport and storage of the luminaire is permitted in original packing and specified position only!

Opening and closing the light fitting

- ❒ unscrew the slotted screws on the cover pane and open the pane (see fig. 1 and 2)
- ❒ To close the glass pane, press tightly onto the luminaire housing and hand-screw (Test torque 1.5 Nm)

Mounting dimensions: see fig. 9

Recessed ceiling installation
For recessed ceiling installation into sufficient capable ceilings the mounting lugs (4 x 18 W/6 x 36 W/ 8 x 58 W) have to be screwed with an Allen key 4 mm through the aperture in the mounting frame. The apertures have to be sealed with blanking plugs after be used. **Observe the correct ceiling cutout!**
When fixing the mounting accessories onto the light fitting (M8 x 18), observe the **max. depth of thread! Do not use too long screws!**

Accessories for mounting: See CCH/CEAG catalogue.

Mains connection
To open the connection box, turn the green handle to its stop in the direction of arrow, then pull it and fold down the flap, see fig. 5 and 6.

- ❒ Introduce the cable through the Ex cable entry, see fig. 5. Use both sealing inserts for cables from 8 to 12 mm, and the outer sealing insert only for cables from 12 to 17 mm. Pay attention to the proper fit of the remaining sealing insert in the cable gland.
- ❒ Connect the conductors to the terminals PE, N, L1, (L, L2, L3) in accordance with the terminal marking (see wiring diagram, page 2). With single connection of the terminal no bending (loop) of the conductor required! Also tighten vacant terminals!

Attention

⚠ **Use only fixed installed cables! If cable glands of other manufacturer are used the specifications regarding clamping and strain relief have to be observed.**
In case of unused cable entries, remove their protective cover and close the entries with a blanking plug (torque of 3.5 Nm). When closing the gland with a blanking plug, always use both sealing inserts! When metal cable entries are used, the protective caps of the unused entries are to be removed and the entries to be closed with certified
Ex blanking plugs! (min. IP 66)

Fitting the lamps

⚠ **Only use such lamps that have been certified for these light fittings, see Technical data and type label! Note! Observe the safety instructions of the lamp manufacturer!**

Single-pin lamp (Fa6)
First insert one side of the lamp into the lampholder. Then pull the opposite lampholder slightly outwards and insert the lamp.

Bi-pin lamp (G13)
The lamp is to be inserted to its stop into both holders, see fig. 7, so that both pins on either side of the lamp engage in the holder.
Then turn the lamp through 90° to its lock-in position, see fig. 8, the green surface in the holder getting visible. Now the lamp is secured against falling out.

Installation of luminaires with CG S-module
see page 8

5. Taking into operation

⚠ **Prior to operation, check the light fitting for its proper functioning and installation in compliance with these operating instructions and other applicable regulations!**

Only carry out insulation measurements between PE and the external conductor L1 (L, L2, L3) as well as between PE and N.
– measuring voltage: max. 1 kV AC/DC
– measuring current: max. 10 mA

The additional CG module makes the operation on an AC and DC mains voltage possible and allows monitoring without additional data line. (See operating instruction of CEAG emergency systems)
The automatic function monitoring of the luminaires depends on the programming of the emergency supply system (see instruction of the CEAG emergency system)
In AC voltage operation both lamps in the luminaire will be operated. The luminous flux is indicated in the technical data of the luminaire. In DC voltage operation the monitoring device automatically switches off one lamp and thus achieves a reduction of the power consumption by about 50% of the rated output.
Should the AC mains return, the second lamp will automatically be switched on again.
Warning! When the rated voltage (AC/DC) fall below or exceed the permissible values, that might entail malfunctions of the circuits or even destroy them.

6. Maintenance

⚠ **Observe the national regulations applicable to the maintenance, servicing and test of apparatus for explosive atmospheres e.g IEC 60079-17 as well as the general rules of engineering!**

Servicing
When servicing, in particular those components that affect the explosion protection, will have to be checked, e. g.:

- ❒ Housing and cover pane for any cracks or damages.
- ❒ Gaskets for their perfect condition.
- ❒ Terminals and blanking plugs for their firm fit.

Lamp replacement

- ❒ Lamp replacement: Keep replacement intervals as specified by the lamp manufacturer!
- ❒ Lamp replacement can be done without cut off the luminaire from mains supply, because an all pole switch will isolate the lampholders while opening the protective bowl.
  Notice: Observe national standards or directions for use which can be divergent to this!

Repair

⚠ **Prior to replacing or removing any components, observe the following:**
Cut the apparatus off the voltage before opening it or carrying out repairs! Only use certified genuine CCH/CEAG spare parts! (See CCH/CEAG spare parts list).

Subject to alteration or supplement of this product series.

Regarding waste disposal, observe the relevant national regulations! The plastic materials are marked with material identifications.

Installation der Leuchte mit CG-S-Modul

Das CG-S Modul überwacht und meldet an das angeschlossene CEAG Notlichtversorgungssystem die Funktion der Leuchtstofflampe.
Im DC-Betrieb wird eine Lampe abgeschaltet, die zweite Lampe (grüne Markierung am Fassungsträger) leuchtet weiter.

Mit dem CG-S-Überwachungsmodul mit Codierschalter für max. 20 Adressen kann die CG-S Leuchte als einzelüberwachte Notleuchte an CEAG Notlichtversorgungssystemen betrieben werden. Hierbei kann der Betreiber die Schaltungsart frei programmieren. So können an einem Endstromkreis bis zu 20 Leuchten in unterschiedlichen Schaltungsarten betrieben werden.
Weitere Informationen zu den Schaltungsarten entnehmen sie den technischen Unterlagen der verwendeten Notlichtversorgungsgeräte.

Adressierung

Vor Inbetriebnahme der Leuchte muß die individuelle Leuchtenadressierung eingestellt werden. Hierzu ist mit einem geeigneten Schraubendreher die gewünschte Adresse (1 - 20) am Adressschalter einzustellen (Pfeil auf Zahl, Bild Ⓐ). Soll die Leuchte nicht überwacht werden, ist immer die Stellung 0/0 einzustellen (Siehe Tabelle Ⓑ)
Zulässige Anschlussleistung nicht überschreiten!

Installation of luminaires with CG-S module

The CG-S module monitors and indicates to the connected CEAG emergency supply system the operation of the supply unit circuit and the function of the luminaire.

In DC mode, one luminaire will be turned off while the other continues to shine
(green markings on the luminaire holder).

The CG-S module allows single monitoring of these luminaires in CEAG emergency lighting systems. The switching mode (maintained/non-maintained and switched emergency luminaires) is freely programmable and mixed operation up to 20 addresses in a single circuit is possible.
For further information to the switching mode please refer to the relevant instruction manual of the emergency power supply unit.

Addressing

Before fitting the cover, the addressing of the individual luminaires is to be carried out. The desired address (1 - 20) is set on the address switch by means of a suitable screw driver (Arrowhead to No., fig. Ⓐ). If the luminaire should not be monitored the code 0/0 has to be selected (see table Ⓑ).

Do not exceed the permissible power output!

Installation de la lampe avec le module CG-S

Le module CG-S surveille et signale au système d'alimentation de l'éclairage de secours CEAG raccordé, le fonctionnement de la lampe fluorescente compacte.

En mode DC, une des lampes est mise hors-tension alors que l´autre continue à briller
(marquage vert sur le support de lampe).

Dans le CC-opération une lampe est mise hors circuit, brille plus encore la deuxième lampe (marquage rouge à la douille).

Avec le module de surveillance CG-S équipé d'un commutateur de codage pour un maximum de 20 adresses, la lampe exploitée comme lampe de secours unique contrôlée, reliée aux systèmes d'alimentation d'éclairage de secours CEAG.
L'exploitant peut dans ce cas, programmer librement le mode de commutation. Ainsi, jusqu'à 20 afficheurs peuvent être exploités avec différents modes de commutation dans un circuit électrique terminal.

Pour de plus amples informations au mode de commutation référez-vous s'il vous plaît au manuel d'instruction approprié de l'unité d'approvisionnement d'alimentation de secours.

Adressage

L'adressage individuel des afficheurs doit être effectué avant le montage du couvercle du panneau de l'afficheur. Pour cela, procédez au réglage de l'adresse souhaitée (1 - 20) au commutateur d'adresses à l'aide d'un tournevis approprié. (flèche face aux nombres, fig. Ⓐ). Si l'afficheur ne doit pas être surveillé, régler toujours la position sur 0/0 (Ⓑ).
Ne dépassez pas la puissance de raccordement admissible de l'onduleur.

Zulässige Leuchtenanzahl je Abgangsstromkreis/Max. no. of luminaires to each output circuit/ Nombre de lampes admissible par circuit de départ

Typ/type/Type	eLLB 20018/18	eLLB 20036/36	eLLB 20058/58	eLLB 20418	eLLB 20436
Anschluss an/Connection to/ Raccordement à: CEAG					
SKU 2x3 A CG-S	16	9	6	8	5
SKU 1x6 A CG-S	20	17	11	10	9
SKU 4x1 A CG	5	3	2	2	1
SKU 2x3 A CG	12	9	6	6	5
SKU 1x6 A CG	18	17	11	9	8

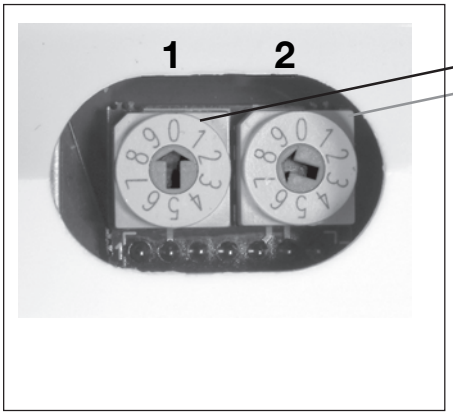

Ⓐ **Adresssierung/Addressing/Adressage**

Adressschalter 1/ Address switch 1/ Position de l'interrupteur 1	Adressschalter 2/ Address switch 2/ Position de l'interrupteur 2	Leuchtenadresse/ Luminaire address/ Adresse de luminaire
0	0	Überwachung aus/ Monitoring off/ aucune surveillance
0	1	1
0	2	2
…	…	…
1	0	10
1	1	11
…	…	…
…	…	…
2	0	20
2	1	nicht zulässig not permissable/ pas possible
…	…	…
9	9	nicht zulässig/ not permissable/ pas possible

Ⓑ **Adresssierung/Addressing/Adressage**

Cooper Crouse-Hinds GmbH
Neuer Weg - Nord 49
D 69412 Eberbach / Germany
Fone +49 (0) 6271/806 - 500
Fax +49 (0) 6271/806 - 476
Internet: http://www.CEAG.de
E-Mail: sales.cch.de@cooperindustries.com

300 8000 1447(G)/XX/46.2011/WE
Technische Änderungen vorbehalten!
Betriebsanleitung gültig ab 48.2011

COOPER Crouse-Hinds

EG-Konformitätserklärung
EC-Declaration of conformity
CE-Déclaration de conformité
DMT 02 ATEX E 069

GHG 900 1000 P0025 C

Wir / we / nous

Cooper Crouse-Hinds GmbH
Neuer Weg-Nord 49
D-69412 Eberbach

erklären in alleiniger Verantwortung, dass die
hereby declare in our sole responsibility, that the
déclarons de notre seule responsabilité, que le

Leuchte mit Leuchtstofflampe
Luminaire with fluorescent lamps
Luminaire avec fluorescentes

Ⓔx II 2 G Ex dem IIC T4 / Ⓔx II 2 G Ex dem ib IIC T4
Ⓔx II 2 D Ex tD A21 IP66 T80°C

Typ eLLB 20.. / eLLB20 ..CG-S / eLLB20.. NIB

auf die sich diese Erklärung bezieht, mit den folgenden Normen oder normativen Dokumenten übereinstimmen.
which are the subject of this declaration, are in conformity with the following standards or normative documents.
auquel cette déclaration se rapporte, est conforme aux normes ou aux documents normatifs suivants.

Bestimmungen der Richtlinie Terms of the directive Prescription de la directive		Titel und / oder Nr. sowie Ausgabedatum der Norm. Title and / or No. and date of issue of the standard. Titre et / ou No. ainsi que date d'émission des normes.	
94/9/EG:	Geräte und Schutzsysteme zur bestimmungsgemäßen Verwendung in explosionsgefährdeten Bereichen.	**EN 60 079-0: 2006** **EN 60 079-1: 2004** **EN 60 079-7: 2007** **EN 60 079-11: 2007**	
94/9/EC:	Equipment and protective systems intended for use in potentially explosive atmospheres.	**EN 60 079-18: 2004** **EN 61 241-0: 2006** **EN 61 241-1: 2004**	
94/9/CE:	Appareils et systèmes de protection destinés à être utilisés en atmosphère explosibles.	**EN 60 529: 1991 + A1: 2000** **EN 60598-2-2: 1996+A1: 1997** **EN 61347-1:2001** **EN 61347-2-3: 2001 + A1: 2004+A2: 2006**	
2000/55/EG:	Energieeffizienzanforderung an Vorschaltgeräte für Leuchtstofflampen	**2000 / 55 / EC Annex 1 Category 1** **2 x 18 W / 16 W**	**Class A3**
2000/55/EC:	Energy efficiency requirements for ballasts for fluorescent lighting	**4 x 18 W / 16 W** **2 x 36 W / 32 W**	**Class A3** **Class A2**
2000/55/CE:	établissant des exigences de rendement énergétique applicables aux ballasts pour l'éclairage fluorescent	**4 x 36 W / 32 W** **2 x 58W / 50 W**	**Class A2** **Class A2**
2004/108 EG: *2004/108 EC:* *2004/108 CE:*	Elektromagnetische Verträglichkeit *Electromagnetic compatibility* *Compatibilité électromagnétique*	**EN 55 015: 2006+A1: 2007**	

Eberbach, den 22.07.2008

Ort und Datum *Place and date* *Lieu et date*	i.A. R. Brandel Leiter Labor *Head of Laboratory* *Chef du dépt. Laboratoire*	i.V. H. Huter Leiter Approbation *Head of Approval office* *Chef du dépt. approbation*

PTB 96 ATEX Q 1 - 4

Zertifizierungsstelle
Notified Body of the certification
Organes Notifié et Compétent

Physikalisch-Technische Bundesanstalt (0102)
Bundesallee 100
D-38116 Braunschweig

Konformitätsbewertungsstelle
Notified Body to quality evaluation
Organes d'attestation de conformité

Physikalisch-Technische Bundesanstalt (0102)
Bundesallee 100
D-38116 Braunschweig

Für den Sicheren Betrieb des Betriebsmittels sind die Angaben der zugehörigen Betriebsanleitung zu beachten.
For the safe use of this apparatus, the informations given in the accompanying operating instructions must be followed.
Afin d'assurer le bon fonctionnement de nos appareils, priére de respecter les directives du mode d'emploi correspondent à ceux-ci.

CEAG

Translation

(1) # EC-Type Examination Certificate

(2) **- Directive 94/9/EC -**
Equipment and protective systems intended for use in potentially explosive atmospheres

(3) ## DMT 02 ATEX E 069

(4) **Equipment:** **Built-in luminaire for fluorescent lamps, type eLLB 20..**

(5) **Manufacturer:** **CEAG Sicherheitstechnik GmbH**

(6) **Address:** **D 69412 Eberbach**

(7) The design and construction of this equipment and any acceptable variation thereto are specified in the schedule to this type examination certificate.

(8) The certification body of Deutsche Montan Technologie GmbH, notified body No. 0158 in accordance with Article 9 of the Directive 94/9/EC of the European Parliament and the Council of 23 March 1994, certifies that this equipment has been found to comply with the Essential Health and Safety Requirements relating to the design and construction of equipment and protective systems intended for use in potentially explosive atmospheres, given in Annex II to the Directive.
The examination and test results are recorded in the test and assessment report BVS PP 02.2045 EC.

(9) The Essential Health and Safety Requirements are assured by compliance with:

EN 50014:1997 + A1 – A2	General requirements
EN 50018:2000	Flameproof enclosure
EN 50019:2000	Increased safety
EN 50020:1994	Intrinsic safety
EN 50281-1-1:1998	Dust explosion protection

(10) If the sign "X" is placed after the certificate number, it indicates that the equipment is subject to special conditions for safe use specified in the schedule to this certificate.

(11) This EC-Type Examination Certificate relates only to the design, examination and tests of the specified equipment in accordance to Directive 94/9/EC.
Further requirements of the Directive apply to the manufacturing process and supply of this equipment. These are not covered by this certificate

(12) The marking of the equipment shall include the following:

Ex II 2G EEx ed II C T4 or EEx ed ib IIC T4
II 2D IP 66 T 80 °C

Deutsche Montan Technologie GmbH
Essen, dated 13. May 2002

Signed: Jockers — DMT-Certification body

Signed: Eickhoff — Head of special services unit

am Technologiepark 1, 45307 Essen, Telefon (0201)172-1416, Telefax (0201)172-1716

(13) Schedule to

(14) # EC-Type Examination Certificate

DMT 02 ATEX E 069

(15) 15.1 Subject and Type
Built-in luminaire for fluorescent lamps,

type eLLB 20 018/18,
type eLLB 20 018/18 CG,
type eLLB 20 036,
type eLLB 20 036/36 and
type eLLB 20 036/36 CG

15.2 Description
The built-in luminaire for fluorescent lamps is an explosion-protected electrical apparatus for two-pin lamps with G13 lamp cap and for single-pin lamps with Fa6 lamp cap.

The luminaire is equipped with electronic ballasts, holders, terminals, entries, sealing elements and, in certain cases, with a mains and monitoring unit for the connection of the luminaire to an emergency lighting supply, as well as with a switch for isolating the lamp holders when the glass of the luminaire is opened. In the case of luminaires with built-in mains and monitoring units, the addressing for recognition in an emergency lighting installation is set by means of intrinsically safe addressing switches.

15.3 Parameters

Rated voltage:				
Type eLLB 20 018/18, type eLLB 20 036 and type eLLB 20 036/36	AC	110 ...254	V	+/- 10%
		47 .. 63	Hz	
	DC	110 ...230	V	+/- 10%
Type eLLB 20 018/18 CG and type eLLB 20 036/36 CG	AC	220 ...254	V	+/- 10%
		47 .. 63	Hz	
	DC	220	V	+25% -20%
Lamp wattage, type eLLB 20 018/18	2 * 18		W	
Lamp wattage, type eLLB 20 018/18 CG	2 * 18		W	
Lamp wattage, type eLLB 20 036	1 * 36		W	
Lamp wattage, type eLLB 20 036/36	2 * 36		W	
Lamp wattage, type eLLB 20 036/36 CG	2 * 36		W	
Ambient temperature range	-20 °C to + 50°C			
Degree of protection in acc. with EN 60529	IP 66			

(16) Test and assessment report
BVS PP 02.2045 EG, as of 13.05.2002

(17) Special conditions for safe use
Not applicable

Am Technologiepark 1, 45307 Essen, Telefon (0201)172-1416, Telefax (0201)172-1716

DMT

We confirm the correctness of the translation from the German original.
In the case of arbitration only the German wording shall be valid and binding.

45307 Essen, 05.05.2003
BVS-Ld/Mi 20020376

Deutsche Montan Technologie GmbH

DMT-Certification body

Head of special services unit

Am Technologiepark 1, 45307 Essen, Telefon (0201)172-1416, Telefax (0201)172-1716

Translation

DMT

1st Supplement

(Supplement in accordance with Directive 94/9/EC Annex III number 6)

to EC-Type Examination Certificate
DMT 02 ATEX E 069

Equipment: **Built-in luminaire for fluorescent lamps, type eLLB 20..**

Manufacturer: **CEAG Sicherheitstechnik GmbH**

Address: **D - 69412 Eberbach**

Description
Built-in luminaire for fluorescent lamps,
type eLLB 20 018/18,
type eLLB 20 018/18 CG,
type eLLB 20 036,
type eLLB 20 036/36 and
type eLLB 20 036/36 CG

The luminaire can be modified according to the descriptive documents as mentioned in the pertinent test and assessment report for the manufacture of versions with 58 W fluorescent lamps and can be fitted with a mains/emergency lighting unit.

The following type codes apply for modified luminaires with 58 W fluorescent lamps:

type eLLB 20 058,
type eLLB 20 058/58 and
type eLLB 20 058/58 CG.

When fitted with a mains/emergency lighting unit, the following type codes apply:

type eLLB 20 018/18 Ni
type eLLB 20 036 Ni and
type eLLB 20 036/36 Ni

The Essential Health and Safety Requirements of the modified equipment are assured by compliance with:

EN 50014:1997 + A1 – A2	General requirements
EN 50018:2000	Flameproof enclosure
EN 50019:2000	Increased safety
EN 50020:1994	Intrinsic safety
EN 50281-1-1:1998	Dust explosion protection

Am Technologiepark 1, 45307 Essen, Telefon (0201)172-1416, Telefax (0201)172-1716

DMT

Parameters
Rated voltage:

Type eLLB 20 058/18 and type eLLB 20 058/58	AC	110 ...254	V	+/- 10%
		47 ...63	Hz	
	DC	110 ...230	V	+/- 10%
Type eLLB 20 058/58 CG	AC	220 ...254	V	+/- 10%
		47 ...63	Hz	
	DC	220	V	+25% -20%
Type eLLB 20 018/18 Ni, type eLLB 20 036 Ni, type eLLB 20 036/36 Ni	AC	110 ...254	V	+/- 10%
		47 ...63	Hz	
	DC	110 ...230	V	+/- 10%
or	AC	220 ...254	V	+/- 10%
		47 ...63	Hz	
	DC	220	V	+25% -20%
Lamp wattage, type eLLB 20 058	1 * 58		W	
Lamp wattage, type eLLB 20 058/58 or. eLLB 20 058/58 CG	2 * 58		W	

All other parameters remain unchanged.

Test and assessment report
BVS PP 02.2045 EC as of 05.05.2003

Deutsche Montan Technologie GmbH
Essen, dated 05. Mai 2003

DMT-Certification body | Head of special services unit

We confirm the correctness of the translation from the German original.
In the case of arbitration only the German wording shall be valid and binding.

45307 Essen, 05.05.2003
BVS-Ld/Mi A 20020376

Deutsche Montan Technologie GmbH

DMT-Certification body | Head of special services unit

Am Technologiepark 1, 45307 Essen, Telefon (0201)172-1416, Telefax (0201)172-1716

Test and assessment report
BVS PP 02.2045 EG as of 14.06.2005

EXAM BBG Prüf- und Zertifizier GmbH
Bochum, dated 14.06.2005

Signed: Dr. Jockers
Certification body

Signed: Dr. Eickhoff
Special services

We confirm the correctness of the translation from the German original.
In the case of arbitration only the German wording shall be valid and binding.

44809 Bochum, 14.06.2005
BVS-Ld/Ar A 20050223

EXAM BBG Prüf- und Zertifizier GmbH

Certification body

Special services

Dinnendahlstrasse 9 44809 Bochum Germany Phone +49 234 3696-105 Fax +49 234 3696-110

6. Nachtrag

(Ergänzung gemäß Richtlinie 94/9/EG Anhang III Ziffer 6)

zur EG-Baumusterprüfbescheinigung
DMT 02 ATEX E 069

Gerät: **Einbauleuchte für Leuchtstofflampen Typ eLLB 20..**

Hersteller: **Cooper Crouse-Hinds GmbH**

Anschrift: **69412 Eberbach**

Beschreibung

Die Einbauleuchte kann auch nach den im zugehörigen Prüfprotokoll aufgeführten Prüfungsunterlagen künftig auch für einen Umgebungstemperaturbereich von -25 °C bis + 50°C verwendet werden.

Die in dieser Leuchtenausführung verwendbaren ein- und angebauten Komponenten sind im Prüfprotokoll in der unter 3.1 der Dokumentation aufgeführten Beschreibung festgelegt und in folgenden Bescheinigungen behandelt:

Vorschaltgerät Typ EVG 05,	PTB 05 ATEX 2081 U,	EEx ed IIC
Klemmleiste Typ 2410,	PTB 00 ATEX 3101 U,	EEx e II
Zweistiftfassung G13 Typ 2457-3,	PTB 96 ATEX 2143 U,	EEx e II
Einstiftfassung Fa6 Typ 2 2449,	PTB 00 ATEX 2125 U,	EEx ed IIC
Leuchtenschalter Typ GHG 883....,	PTB 00 ATEX 1105 U,	EEx de IIC
Schalter Bartec Typ 07-1501-...,	PTB 98 ATEX 1033 U,	EEx de IIC
Reduzierung Typ GHG 960 ...,	PTB 99 ATEX 3128X,	EEx e II
Kabel- und Leitungseinf. Typ GHGH 960 ...,	PTB 99 ATEX 3128 X,	EEx e II
Entlüftungsstopfen Typ Redapt M25,	SIRA 99 ATEX 3050 U,	EEx e II
Überwachungseinheit Typ CG-S-Modul,	PTB 04 ATEX 2110 U,	EEx emib IIC

Die grundlegenden Sicherheits- und Gesundheitsanforderungen der geänderten Ausführung werden erfüllt durch Übereinstimmung mit

EN 50014:1997+A1-A2	Allgemeine Bestimmungen
EN 50019:2000	Erhöhte Sicherheit
EN 50281-1-1:1998 +A1	Staubexplosionsschutz

Für die Einbauleuchte wurde u. a. die Norm EN 50019:2000 Erhöhte Sicherheit 'e' angewandt; damit werden weiterhin die grundlegenden Anforderungen der Richtlinie 94/9/EG für dieses Betriebsmittel erfüllt.

Die Kennzeichnung des Gerätes muss die folgenden Angaben enthalten:

II 2G EEx edm II C T4 bzw. EEx edm ib IIC T4
II 2D IP 66 T 80 °C

DEKRA EXAM GmbH Dinnendahlstraße 9 44809 Bochum Telefon 0234/3696-105 Telefax 0234/3696-110 E-mail zs-exam@dekra.com
(bis 31.05.2003, Deutsche Montan Technologie GmbH Am Technologiepark 1 45307 Essen)

Kenngrößen
Umgebungstemperaturbereich der Einbauleuchte -25 °C bis +50 °C

Der Umgebungstemperaturbereich der Leuchtstofflampen eLLB 20… in der Ausführungsvariante NIB bleibt unverändert.

Die sonstigen Kenngrößen bleiben unverändert.

Prüfprotokoll
BVS PP 02.2045 EG, Stand 11.04.2007

DEKRA EXAM GmbH
Bochum, den 11. April 2007

Zertifizierungsstelle

Fachbereich

DEKRA EXAM GmbH Dinnendahlstraße 9 44809 Bochum Telefon 0234/3696-105 Telefax 0234/3696-110 E-mail zs-exam@dekra.com
(bis 31.05.2003 Deutsche Montan Technologie GmbH Am Technologiepark 1 45307 Essen)

Translation

(1) # 1. Supplement to the EC-Type Examination Certificate

(2) Equipment and protective systems intended for use in potentially explosive atmospheres - Directive 94/9/EC
Supplement accordant with Annex III number 6

(3) No. of EC-Type Examination Certificate: **BVS 09 ATEX E 044 X**

(4) Equipment: **Batteriekasten type eBK 02**

(5) Manufacturer: **Cooper Crouse-Hinds GmbH**

(6) Address: **69412 Eberbach**

(7) The design and construction of this equipment and any acceptable variation thereto are specified in the appendix to this supplement.

(8) The certification body of DEKRA EXAM GmbH, notified body no. 0158 in accordance with Article 9 of the Directive 94/9/EC of the European Parliament and the Council of 23 March 1994, certifies that this equipment has been found to comply with the Essential Health and Safety Requirements relating to the design and construction of equipment and protective systems intended for use in potentially explosive atmospheres, given in Annex II to the Directive. The examination and test results are recorded in the test and assessment report BVS PP 09.2086 EC / N1.

(9) The Essential Health and Safety Requirements are assured by compliance with:

EN 60079-0:2009	**General requirements**
EN 60079-1:2007	**Flameproof enclosure**
EN 60079-7:2007	**Increased safety**
EN 60079-11:2007	**Intrinsic safety**
EN 60079-18:2004	**Encapsulation**
EN 60079-31:2009	**Protection by enclosure**

(10) If the sign "X" is placed after the certificate number, it indicates that the equipment is subject to special conditions for safe use specified in the appendix to this certificate.

(11) This supplement to the EC-Type Examination Certificate relates only to the design, examination and tests of the specified equipment in accordance to Directive 94/9/EC.
Further requirements of the Directive apply to the manufacturing process and supply of this equipment. These are not covered by this certificate.

(12) The marking of the equipment shall include the following:

Ex **II 2G Ex de mb ib IIC T4 Gb**
II 2D Ex tb IIIC T80°C Db IP66

DEKRA EXAM GmbH
Bochum, dated 26.01.2011

Signed: Dr. Eickhoff — Certification body

Signed: Leiendecker — Special services unit

DEKRA EXAM GmbH Dinnendahlstrasse 9 44809 Bochum Phone +49.234.3696-105 Fax +49.234.3696-110 zs-exam@dekra.com

(13) Appendix to

(14) **1. Supplement to the EC-Type Examination Certificate**
BVS 09 ATEX E 044 X

(15) 15.1 Subject and type

Battery boxes type eBK02 and eBS09 and protective enclosure type eBB20 NIB

15.2 Description

The battery boxes type eBK02 and eBS09 and the optional protective enclosure type eBB20 NIB are intended as rechargeable energy storage for emergency lights. The battery box consists of a plastic enclosure for type eBK02 and a stainless steel enclosure for type eBS09. In both battery boxes only the battery type 2710-3 (BVS ATEX E 042 U) is mounted.

The battery assembly is charged and discharged either by the power supply unit type VE97 or by the supply unit/electronic ballast VE/EVG 05 which are mounted into the respective emergency light.

The battery boxes type eBK02 and eBS09 can be either flanged to the light or, optionally, separately mounted into a protective enclosure type eBB20 NIB made of VA sheet steel with a maximum cable length of 1.5 m.

Reason for this supplement is the rise to the actual standards.

15.3 Parameters

15.3.1	Electrical parameters of the accessory battery type 2710-3		
	Nominal voltage	DC	6.0 V
	Capacitance		7.0 Ah
15.3.2	Electrical parameters of the accessory VE/EVG 05 or VE 97		
	Charging voltage	DC	8.0 V
	Charging current		700 mA
15.3.3	Thermal parameters of the accessory battery type 2710-3		
	Ambient temperature range		-25 °C...+55 °C

(16) Test and assessment report

BVS PP 09.2086 EG as of 26.01.2011

(17) Special conditions for safe use

Metallic connection systems have to be considered for equipotential bonding. When the separately certified metallic connection system GHG57 is used together with lights of plastic enclosures the conducting of the equipotential bonding has to be observed.

We confirm the correctness of the translation from the German original.
In the case of arbitration only the German wording shall be valid and binding.

DEKRA EXAM GmbH
44809 Bochum, 26.01 2011
BVS-Kr/Schae A 20100392

Certification body

Special services unit

DEKRA EXAM GmbH Dinnendahlstrasse 9 44809 Bochum Phone +49.234.3696-105 Fax +49.234 3696-110 zs-exam@dekra.com

IECEx Certificate of Conformity

INTERNATIONAL ELECTROTECHNICAL COMMISSION
IEC Certification Scheme for Explosive Atmospheres

for rules and details of the IECEx Scheme visit www.iecex.com

Certificate No.: IECEx BVS 11.0073U issue No.:1

Status: **Current**

Date of Issue: **2014-09-02**

Page 1 of 5

Certificate history:
Issue No. 1 (2014-9-2)
Issue No. 0 (2011-11-8)

Applicant: **Cooper Crouse-Hinds GmbH**
Neuer Weg-Nord 49
69412 Eberbach
Germany

Electrical Apparatus: **Battery blocks type type 22191******, type 33468******, type 22710****** and type 31147******
Optional accessory:

Type of Protection: **Equipment protection by type of protection "n", Equipment protection by increased safety "e"**

Marking: Ex e IIC Gb (all types except 33468236002)
Ex nA IIC Gc (only type 33468236002)

Approved for issue on behalf of the IECEx Certification Body: H.-Ch. Simanski

Position: Head of Certification Body

Signature:
(for printed version) _____

Date: _____

1. This certificate and schedule may only be reproduced in full.
2. This certificate is not transferable and remains the property of the issuing body.
3. The Status and authenticity of this certificate may be verified by visiting the Official IECEx Website.

Certificate issued by:

DEKRA EXAM GmbH
Dinnendahlstrasse 9
44809 Bochum
Germany

DEKRA
DEKRA EXAM GmbH

IECEx Certificate of Conformity

Certificate No.: IECEx BVS 11.0073U

Date of Issue: **2014-09-02** Issue No.: **1**

Page 2 of 5

Manufacturer: **Cooper Crouse-Hinds GmbH**
Neuer Weg-Nord 49
69412 Eberbach
Germany

Additional Manufacturing location(s):

This certificate is issued as verification that a sample(s), representative of production, was assessed and tested and found to comply with the IEC Standard list below and that the manufacturer's quality system, relating to the Ex products covered by this certificate, was assessed and found to comply with the IECEx Quality system requirements. This certificate is granted subject to the conditions as set out in IECEx Scheme Rules, IECEx 02 and Operational Documents as amended.

STANDARDS:
The electrical apparatus and any acceptable variations to it specified in the schedule of this certificate and the identified documents, was found to comply with the following standards:

IEC 60079-0 : 2011 Edition: 6.0	Explosive atmospheres - Part 0: General requirements
IEC 60079-15 : 2010 Edition: 4	Explosive atmospheres - Part 15: Equipment protection by type of protection "n"
IEC 60079-7 : 2006-07 Edition: 4	Explosive atmospheres - Part 7: Equipment protection by increased safety "e"

*This Certificate **does not** indicate compliance with electrical safety and performance requirements other than those expressly included in the Standards listed above.*

TEST & ASSESSMENT REPORTS:
A sample(s) of the equipment listed has successfully met the examination and test requirements as recorded in

Test Report:
DE/BVS/ExTR11.0102/01

Quality Assessment Report:

DE/BVS/QAR11.0009/02